CHAPTER 54

NACELLES/PYLONS

TABLE OF CONTENTS

Subject	Subject No.
NACELLES/PYLONS - GENERAL	54-00
Station Diagram	54-00-1
MAIN FRAME	54-10
Allowable Damage	54-10-1
Figure 1 - Main Frame	
Figure 2 - Nacelle to Wing Fairing	
Structure Identification	54-10-2
Figure 1 - Engine Nose Cowl	
Figure 2 - Engine Cowl	
Figure 3 - Nacelle to Wing Fairing	
Structure Repairs	54-10-3
Figure 1 - Engine Cowl Repair Below Fire Shield	
Figure 2 - Engine Cowl Repair in Area of Fire Shield	
Figure 3 - Nacelle Nose Cowl Frame Repair Lip Station 5.75	
Figure 4 - Nacelle Nose Cowl Frame Repair at Nacelle Station 99.25	
Figure 5 - Repair to Engine Attachment Ring at Engine Station 103.82	
Figure 6 - Nose Cowl Structure Longeron Repair	
Figure 7 - Nacelle Firewall Web Repair	
Figure 8 - Firewall Repair - Wing to Nacelle Structure	
Figure 9 - Nacelle Mid-Fairing - Firewall Repair	
Figure 10 - Fat Lip Nose Cowl - Station 103.82 Engine Attachment Ring Repair	
AUXILIARY STRUCTURE	54-20
PLATES AND SKINS	54-30
Allowable Damage	54-30-1
Figure 1 - Plates and Skins	
Figure 2 - Erosion Damage to Leading Edge of Air Inlet	
Figure 3 - Nose Dome	
Skin Material Identification	54-30-2
Figure 1 - Nacelle	
Figure 2 - Nacelle to Wing Fairing	
Figure 3 - Aft Fairing	

Subject	Subject No.
Skin Repairs.	54-30-3
Figure 1 - Installation of Nose Cowl Door for Access to Repairs	
Figure 2 - Nose Cowl Skin Repair in the Vicinity of the Nacelle to Wing Fairing	
Figure 3 - No Cowl Skin Repair at Longeron in the Vicinity of the Nacelle to Wing Fairing	
Figure 4 - Nacelle Nose Skin Repair	
ATTACH FITTINGS	54-40

NACELLES/PYLONS

1. General

A. The information for the nacelles and pylons in this section is applicable to all models of the 737 and T-43A airplanes. Repairs and procedures in this section can be applied generally to any model configuration; however, specific component differences have been noted by serialization for individual airplanes.

Material, gage and heat-treat for materials used for structural components are tabulated by chart and item numbered against illustrations showing location and arrangement.

B. Allowable damage limits for structure, skins and fairings are shown by index with explanatory notes and illustrations.

REF DWGS
65-60529
65-73768
65-73771

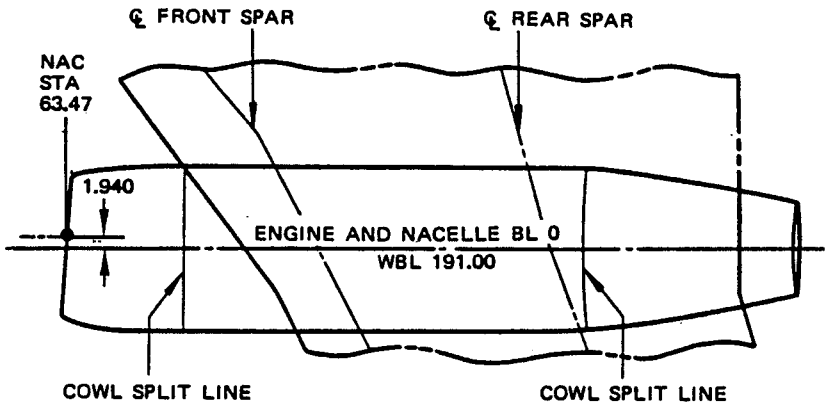

PLAN VIEW – ENGINE NO. 1
ENGINE . 2 OPPOSITE

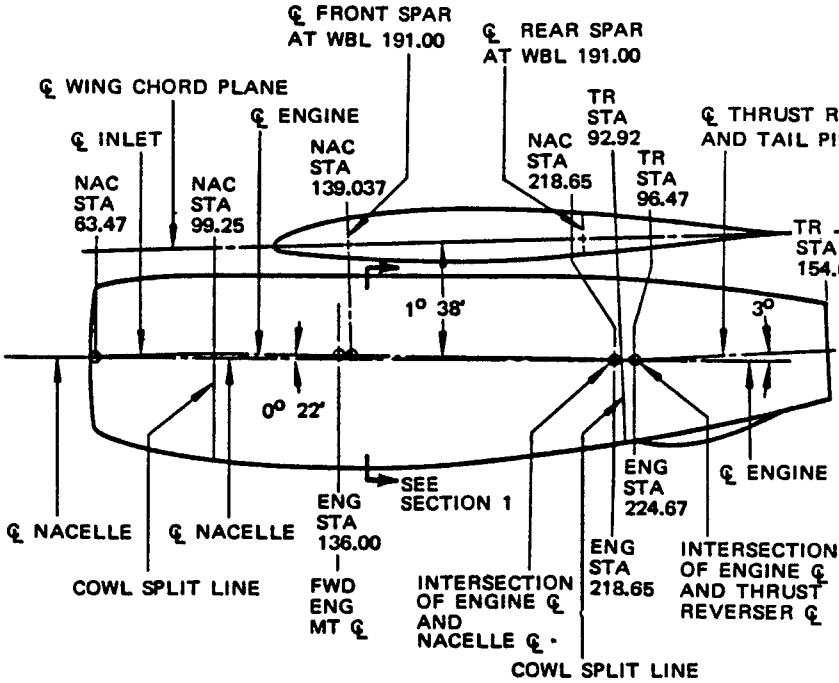

SIDE VIEW – ENGINE NO. 1

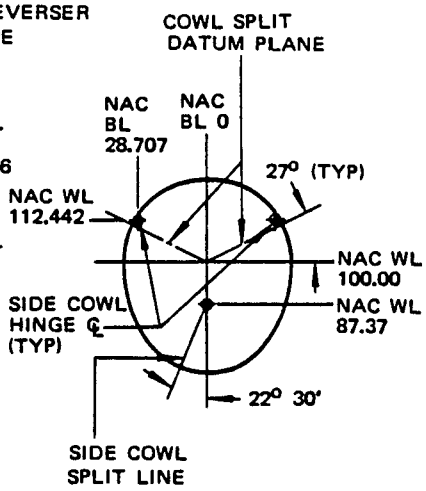

SECTION 1

Nacelles and Pylon Station Diagram
Figure 1

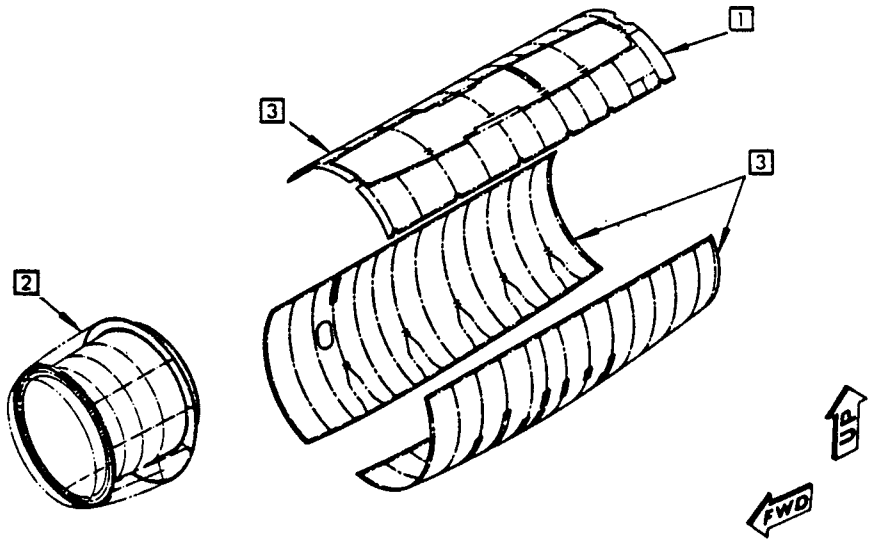

ITEM	LOCATION OF DAMAGE		TYPE OF DAMAGE			
			CRACKS	NICK AND GOUGES	DENTS	HOLES
1	Forward and Mid Fairing	Webs	E	See Detail I A	See Detail II B	D
		Chords			See Detail II C	No Holes Allowed
		Stiffeners				See Detail III
2	Nose Cowl	Webs	E	See Detail III A F	See Detail II B	See Detail III G
		Chords		See Detail III A	See Detail II C	
		Plates		F A		
3	LH and RH Cowls and Fixed Fairing Stiffeners	Webs	E	See Detail I A	See Detail II B	G
		Chords			See Detail II C	
		Stiffeners				

ALLOWABLE DAMAGE INDEX

Allowable Damage - Main Frame
Figure 1 (Sheet 1 of 4)

NOTES

- THE ALLOWABLE DAMAGE LIMITS GIVEN IN THIS FIGURE WILL NOT HAVE AN EFFECT ON A STRUCTURALLY SIGNIFICANT ITEM (SSI) GIVEN IN SRM 51-00-4, FIG. 3. THUS, NO CHANGE TO THE SUPPLEMENTAL STRUCTURAL INSPECTION DOCUMENT (SSID) INSPECTION PROGRAM IS NECESSARY.
- FOR ALLOWABLE DAMAGE ON ATTACHMENT FITTINGS, REFER TO SRM 54-40.
- FOR GENERAL REPAIR PROCEDURE, REFER TO SRM 51-10.
- FOR EDGE MARGIN REQUIREMENTS AFTER DAMAGE CLEAN UP, REFER TO SRM 51-30-6.
- FOR AERODYNAMIC SMOOTHNESS REQUIREMENTS, REFER TO SRM 51-70.
- FOR CORROSION DAMAGE CLEAN UP, REFER TO SRM 51-10.
- REFER TO AMM 51-30-0 FOR VAPOR AND PRESSURE SEAL REQUIREMENTS.
- A REPAIR IS REQUIRED WHEN CRACKS, NICKS, SCRATCHES, GOUGES, DENTS, AND HOLE DAMAGE EXCEED THE ALLOWABLE DAMAGE.
- CLEAN UP ALL NICKS, SCRATCHES, AND GOUGES AS SHOWN IN DETAIL I AND APPLY METAL PROTECTIVE TREATMENT AS GIVEN IN SRM 51-10-2. NICKS, SCRATCHES AND GOUGES THAT DO NOT PENETRATE THROUGH THE CLADDED SURFACES MAY BE IGNORED.
- FINISH ALL REPAIRED AND REWORKED SURFACES AS GIVEN IN AMM 51-21-0.

[A] MAXIMUM DEPTH (X) OF A SCRATCH, GOUGE OR NICK (SEE DETAIL I) MUST NOT EXCEED THE FOLLOWING:
20% OF WEB THICKNESS
20% OF FLANGE THICKNESS OR WIDTH FOR FORMED OR EXTRUDED SECTIONS.

[B] ALLOWABLE DENT DAMAGE IN WEBS MUST NOT EXCEED THE VALUE OF Y = 0.125 INCH WITH A CORRESPONDING Y/A RATIO NOT TO EXCEED 0.03 INCHES PER INCH.

[C] ALLOWABLE DENT DAMAGE TO FORMED SECTION FLANGES MUST NOT EXCEED THE VALUE OF Y = 0.05 INCH WITH A CORRESPONDING Y/A RATIO NOT TO EXCEED 0.03 INCHES PER INCH.

[D] NO HOLES ARE ALLOWED IN WEB OTHER THAN THE ORIGINAL HOLES REQUIRED BY THE MANUFACTURER. REPAIR ALL HOLE DAMAGED PARTS AND APPLY SEALING AS GIVEN IN AMM 51-30-0 FOR FIREWALL AND VAPOR SEALING.

[E] ALL CRACKS NOT COVERED BY DETAIL I MUST BE REPAIRED AS GIVEN IN SRM 51-10. CRACKS AT FLANGE EDGES MUST BE REWORKED PER DETAIL I. TOTAL AREA REMOVED INCLUDING EXISTING FASTENER HOLES, SCRATCHES, GOUGES, AND NICKS MUST NOT REDUCE THE CROSS SECTIONAL AREA OF THE FLANGE IN EXCESS OF 20%. TWO CRACKS MAY NOT BE CLOSER THAN 15 INCHES. EDGE MARGIN ON FASTENERS MUST BE MAINTAINED.

[F] ON ANY REFERENCE LINE A-B DRAWN, SHOWN IN DETAIL III, THE MAXIMUM ALLOWABLE CROSS SECTIONAL AREA REMOVED FROM THE WEB INCLUDING ALL FASTENER HOLES, SCRATCHES, AND GOUGES MUST NOT EXCEED 40% OF THE TOTAL CROSS SECTIONAL AREA BETWEEN POINTS A AND B.

[G] AFTER CLEAN UP, HOLE DAMAGE IN STIFFENER OR BEAM FLANGES MUST NOT EXCEED 20% OF THE FLANGE DIMENSIONS. IF HOLE DAMAGE IN A STIFFENER OR BEAM OCCURS IN A WEB WITHOUT LIGHTENING HOLES, THE CROSS SECTIONAL AREA REMOVED MUST NOT EXCEED THE LIMITS IN NOTE [F]. THE MINIMUM DISTANCE BETWEEN HOLE EDGES MUST NOT BE LESS THAN DIAMETER DY. IF HOLE DAMAGE IN A STIFFENER OR A BEAM WEB OCCURS NEAR AN EXISTING LIGHTENING HOLE THE MINIMUM DISTANCE BETWEEN HOLE EDGES MUST NOT BE LESS THAN 0.75 DW. SEE DETAIL III.

Allowable Damage - Main Frame
Figure 1 (Sheet 2 of 4)

BOEING PROPRIETARY - Copyright © - Unpublished Work - See title page for details.

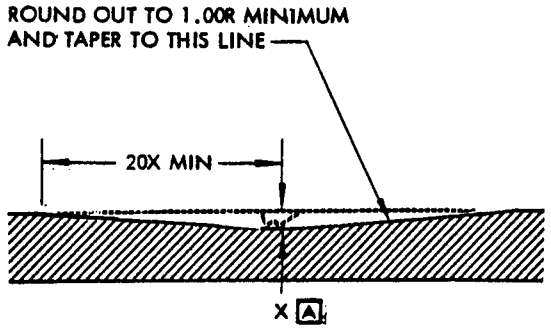

SECTION THROUGH GOUGE

X = DEPTH OF GOUGE

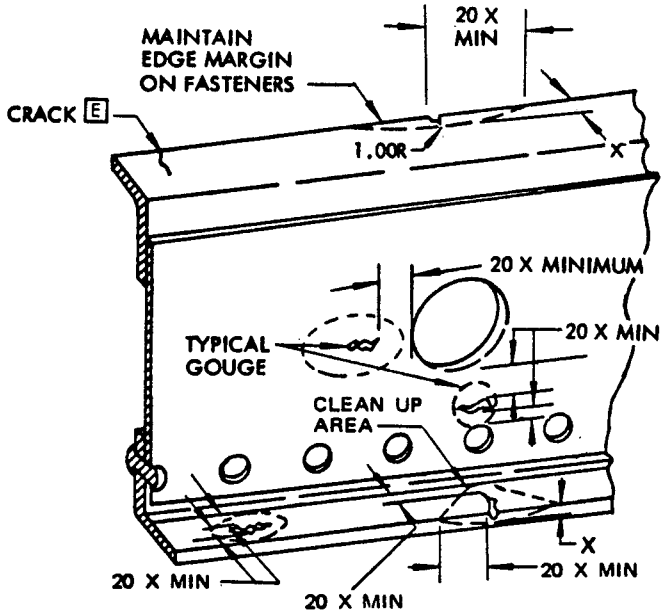

NICKS, GOUGES AND FLANGE EDGE CRACKS

DETAIL I

Y = DEPTH OF DENT FROM CONTOUR

T = THICKNESS OR GAGE OF PART

A = DIAMETER OF DENT

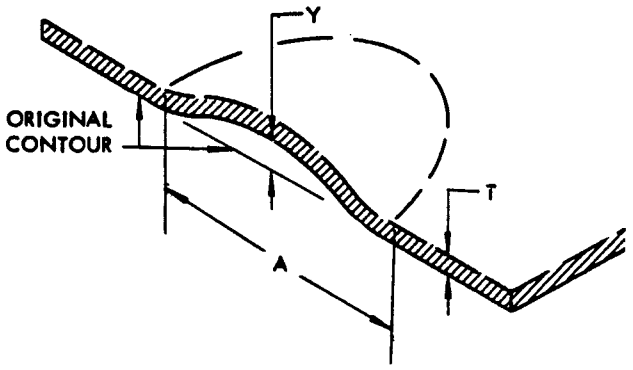

SECTION THROUGH DENT

DETAIL II

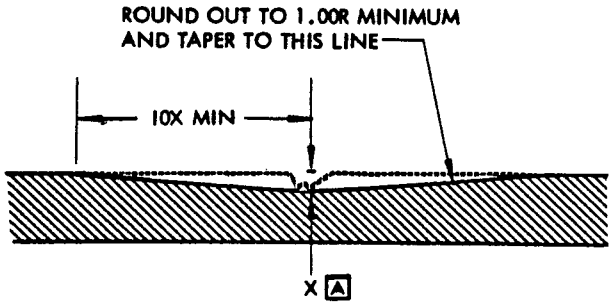

SECTION THROUGH GOUGE

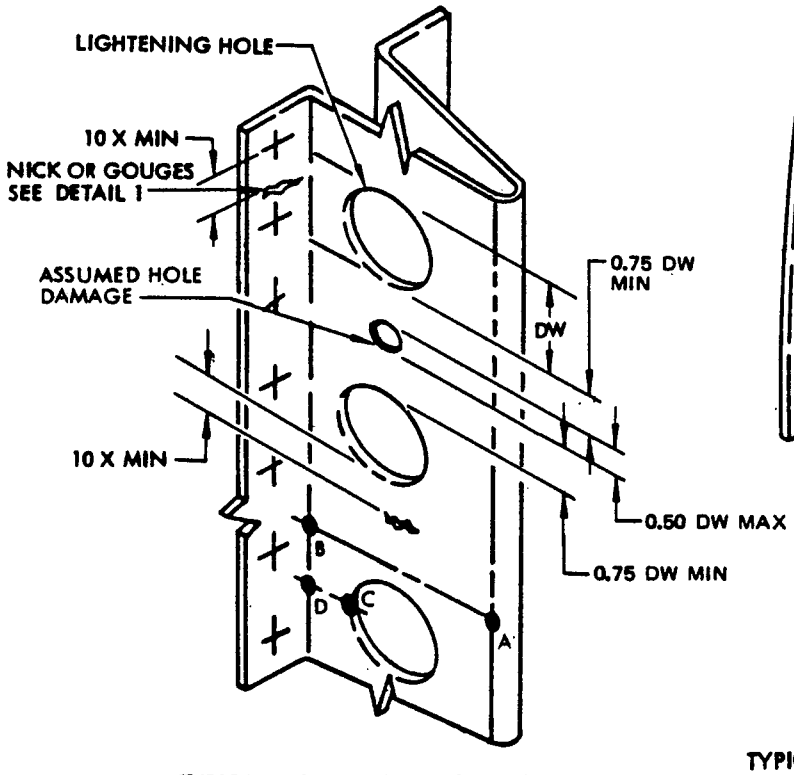

TYPICAL LONGERON-NOSE COWL

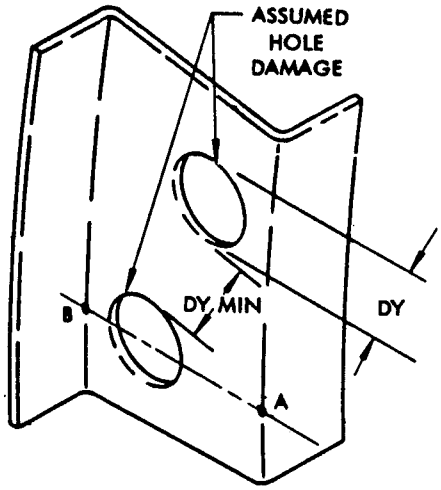

TYPICAL STIFFENER NOSE COWL
FAIRING AND STRUT

X = DEPTH OF GOUGE

DY = DIAMETER OF HOLE DAMAGE

DW = DIAMETER OF EXISTING
LIGHTENING HOLE

HOLE DAMAGE IN AREAS
WITHOUT LIGHTENING HOLES

DETAIL III

REF DWG
65-73769

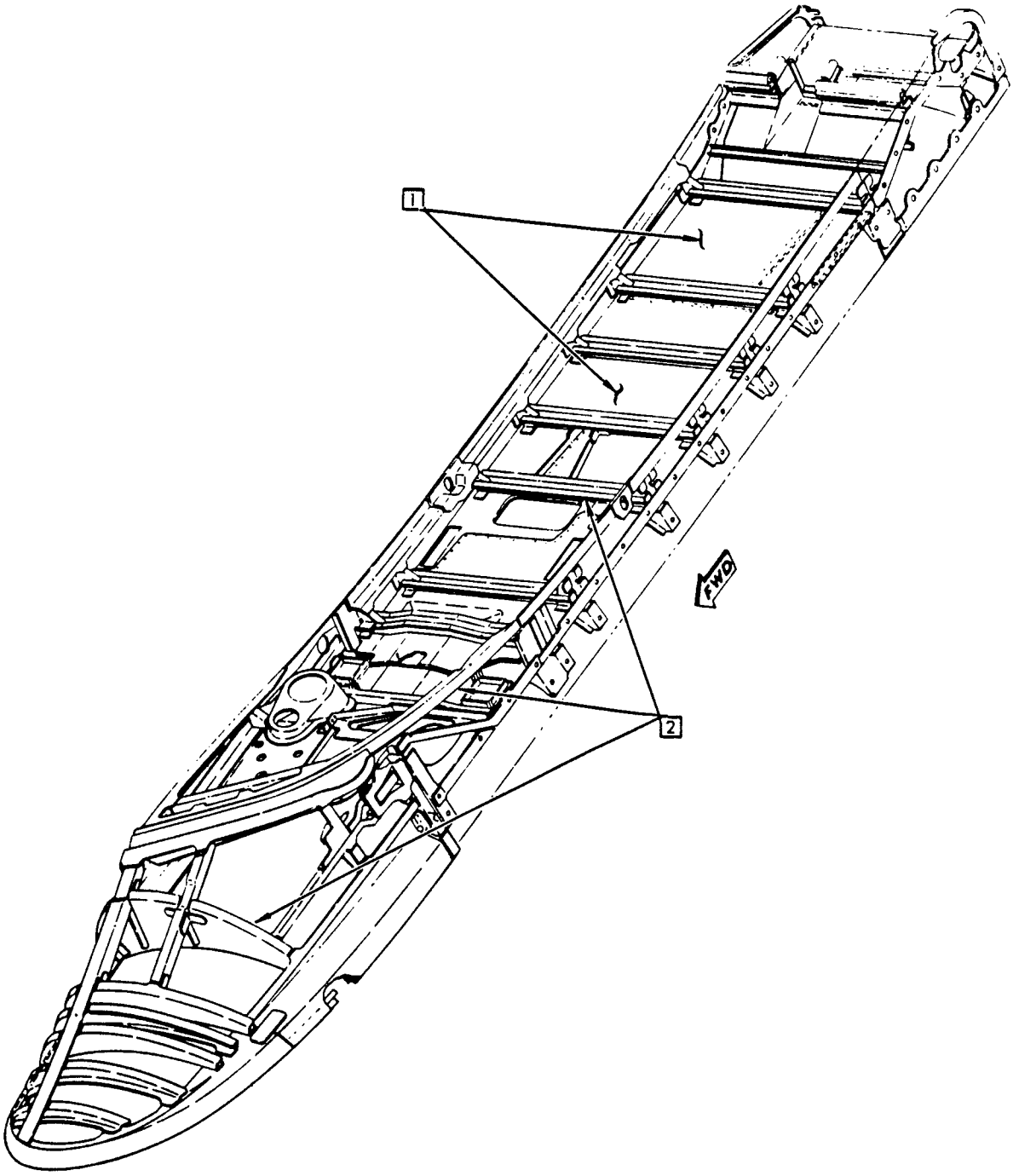

Allowable Damage - Nacelle To Wing Fairing Structure
Figure 2 (Sheet 1 of 3)

ITEM	LOCATION OF DAMAGE		TYPE OF DAMAGE			
			CRACKS	SCRATCHES NICKS AND GOUGES	DENTS	HOLES
1	FIREWALL WEB		CRACKS NOT PERMITTED	SEE DETAIL I [A]	SEE DETAIL III [B]	HOLES NOT PERMITTED
2	STRUCTURE	FLANGES OR CHORDS	SEE DETAIL II [D]	SEE DETAILS I AND II [A] [D]	SEE DETAIL III [C]	HOLES NOT PERMITTED
		WEBS	CRACKS NOT PERMITTED	SEE DETAIL I [A]	SEE DETAIL III [C]	[E]

NOTES

- THE ALLOWABLE DAMAGE LIMITS GIVEN IN THIS FIGURE WILL NOT HAVE AN EFFECT ON A STRUCTURALLY SIGNIFICANT ITEM (SSI) GIVEN IN SRM 51-00-4, FIG. 3. THUS, NO CHANGE TO THE SUPPLEMENTAL STRUCTURAL INSPECTION DOCUMENT (SSID) INSPECTION PROGRAM IS NECESSARY.

[A] MAXIMUM DEPTH AFTER CLEAN UP MUST NOT BE MORE THAN 20% OF MATERIAL THICKNESS.

[B] DENT DAMAGE MUST NOT BE MORE THAN Y = 0.125 INCH. THE MAXIMUM Y/A RATIO MUST NOT BE MORE THAN 0.03 INCH PER INCH. SEE DETAIL III.

[C] DENT DAMAGE MUST NOT BE MORE THAN Y = 0.05 INCH. THE MAXIMUM Y/A RATIO MUST NOT BE MORE THAN 0.03 INCH PER INCH. SEE DETAIL III.

[D] CRACKS AND NICKS IN EDGES OF FLANGES, CLEANED UP AS SHOWN IN DETAIL II, ARE ALLOWABLE PROVIDED NOT MORE THAN 20% OF THE FLANGE WIDTH HAS BEEN REMOVED AND FASTENER EDGE MARGINS ARE MAINTAINED.

[E] A HOLE CAPABLE OF BEING FILLED WITH A RIVET NOT MORE THAN 1/4 INCH IN DIAMETER IS PERMITTED IF THE EDGE MARGINS ARE MAINTAINED AND IT IS AT LEAST 2D FROM THE NEAREST ADJACENT HOLE.

Allowable Damage - Nacelle To Wing Fairing Structure
Figure 2 (Sheet 2 of 3)

BOEING PROPRIETARY - Copyright © - Unpublished Work - See title page for details.

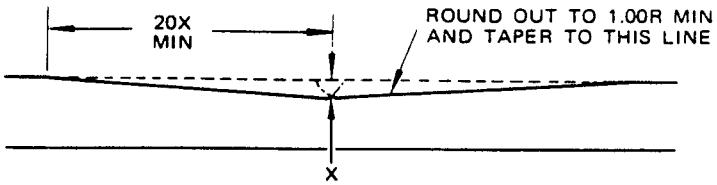

SECTION THROUGH GOUGE
DETAIL I

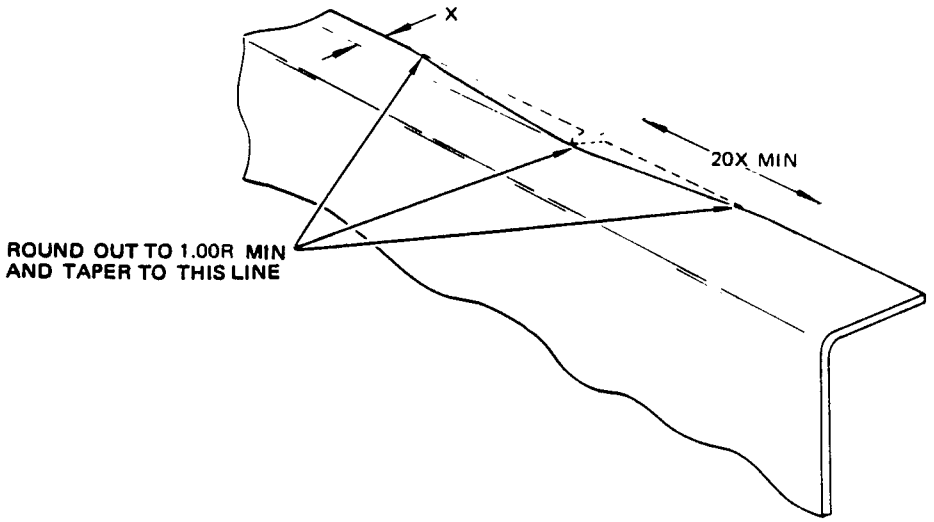

DAMAGE TO FLANGES
DETAIL II

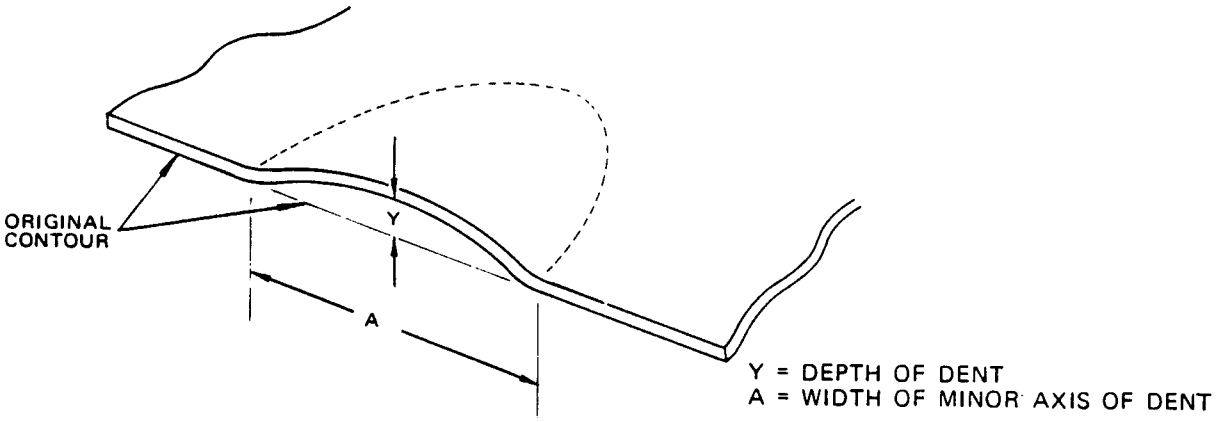

SECTION THROUGH DENT
DETAIL III

Allowable Damage - Nacelle To Wing Fairing Structure
Figure 2 (Sheet 3 of 3)

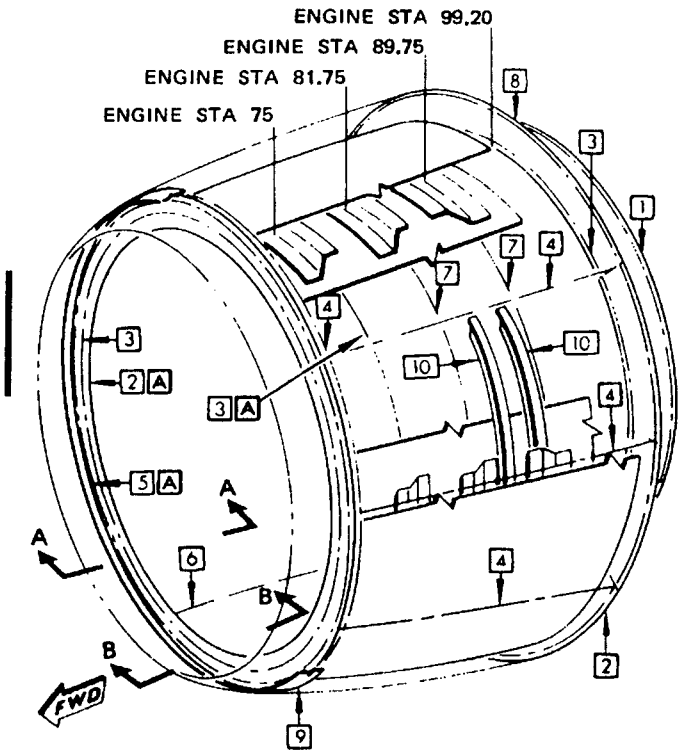

REF DWG
65-73771
65-85378 B

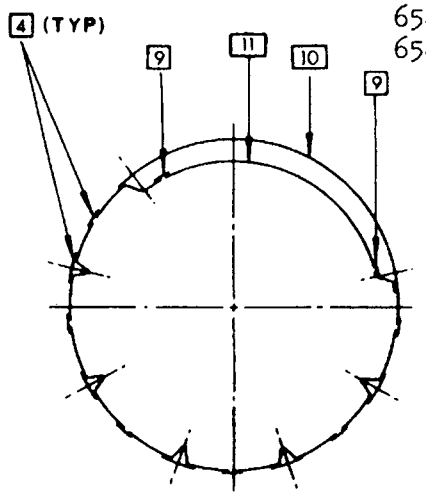

ENGINE STA 95.0

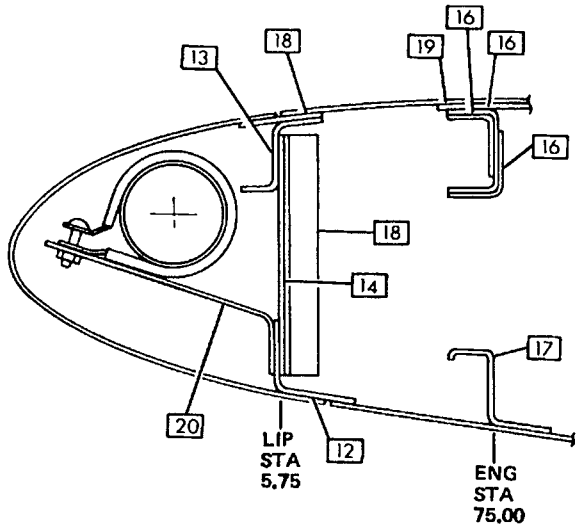

SECTION A–A B

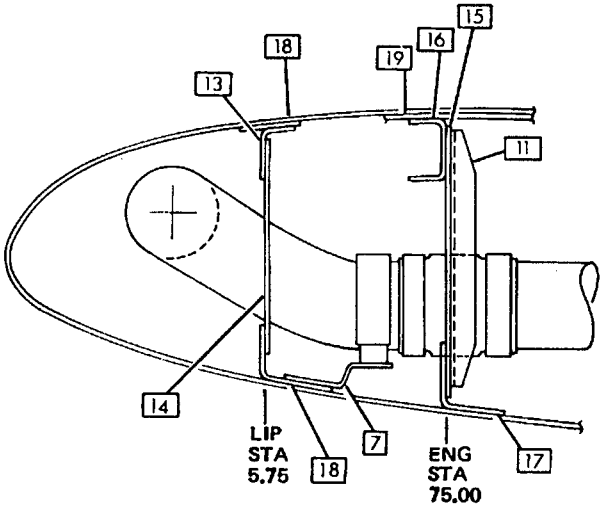

SECTION B–B B

NOTES

A FOR CUM LINE NUMBERS: 1THRU 524 WITHOUT SB71–1045 OR SB71–1046 INCORPORATED

B FOR CUM LINE NUMBERS: 525 AND ON AND EARLIER AIRPLANES WITH SB71–1045 OR SB71–1046 INCORPORATED

Engine Nose Cowl Structure Identification
Figure 1 (Sheet 1)

ITEM	MATERIAL	REPAIR FIG. NO.
1	BAC1514-1161 2024-T42	
2	0.032 CLAD 2024-T3	54-10-3 FIGURE 3 A
3	0.050 CLAD 2024-T42	
4	0.050 2024-T42	
5	0.063 2024-T42	
6	0.071 CLAD 2024-T3	
7	0.063 CLAD 2024-T42	
8	BAC1506-1524 2024-T42	
9	0.063 CLAD 2024-T3	
10	0.040 2024-T42	
11	0.050 CLAD 2024-T43	
12	OUTER CHORD 0.063 CLAD 2219-T62	
13	INNER CHORD 0.080 CLAD 2219-T62	
14	WEB 0.063 CLAD 2219-T81	
15	0.040 CLAD 2024-T3	
16	INNER CHORD 0.063 CLAD 2024-T42	
17	0.040 CLAD 2024-T42	
18	0.063 CLAD 2219-T62	
19	0.072 CLAD 2024-T3	
20	0.040 CRES 17-7PH	

Engine Nose Cowl Structure Identification
Figure 1 (Sheet 2)

ITEM	MATERIAL	REPAIR FIG. NO.
1	0.02 TITANIUM 6AL-4V MIL-T-9046, TYPE III COMP C, ANNEALED	
2	0.04 TITANIUM 6AL-4V MIL-T-9046, TYPE III COMP C, ANNEALED	
3	0.032 TITANIUM 6AL-4V MIL-T-9046, TYPE III COMP C, ANNEALED	
4	0.05 TITANIUM 6AL-4V MIL-T-9046, TYPE III COMP C, ANNEALED	
5	0.07 TITANIUM 6AL-4V MIL-T-9046, TYPE III COMP C, ANNEALED	
6	0.040 CLAD 2024-T3	
7	0.040 CLAD 7075-T6	
8	0.032 CLAD 2024-T4	
9	0.050 CLAD 7075-T6	
10	0.063 CLAD 7075-T6	
11	0.050 CLAD 2024-T3	
12	BAC1513-208 2024-T4	
13	0.032 CLAD 7075-T6	
14	0.040 CRES SH. ANNEALED, 17-7PH, COND A	

ITEM	MATERIAL	REPAIR FIG. NO.
15	0.050 CRES SH. ANNEALED, 17-7PH, COND A	
16	0.032 C.P. TITANIUM MIL-T-9046, TYPE I COMP C, ANNEALED	
17	0.032 CLAD 2024-T42	
18	0.020 CRES SH. AISI 321 ANNEALED	
19	0.032 CRES SH. AISI 321 ANNEALED	
20	BAC1517-1856 OR BAC1516-1860 CLAD 7075-T6	
21	BAC1517-1854 CLAD 7075-T6	
22	BAC1517-1855 OR BAC1517-1859 CLAD 7075-T6	

NOTE

A FOR AIRPLANES WITH SB 78-1005 INCORPORATED ONLY

B FOR ALL US T-43A AIRPLANES

Engine Cowl Structure Identification
Figure 2 (Sheet 1)

REF DWG
65-73771

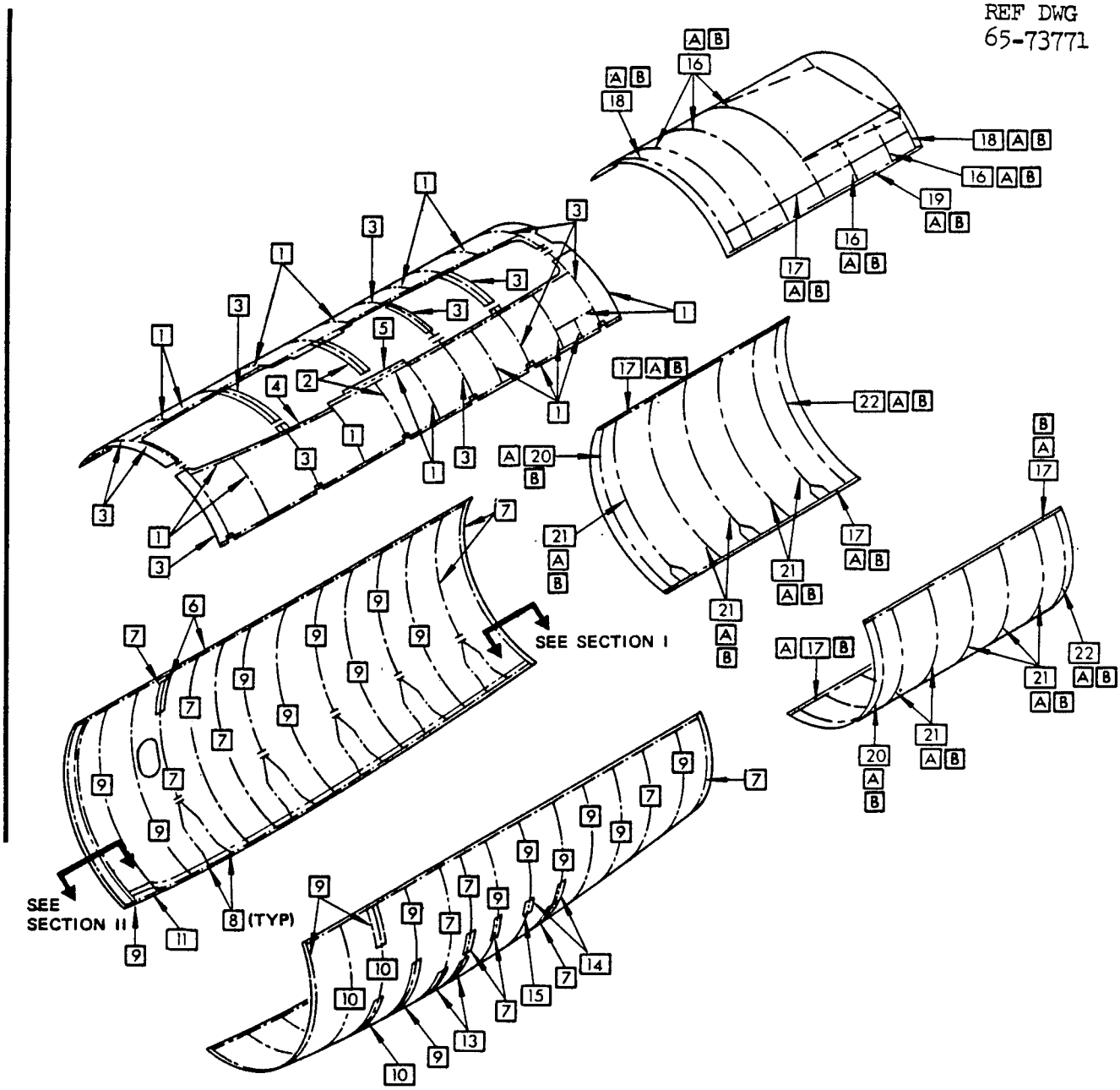

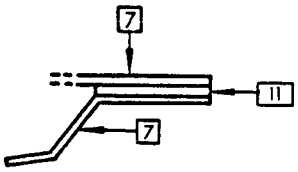

SECTION I

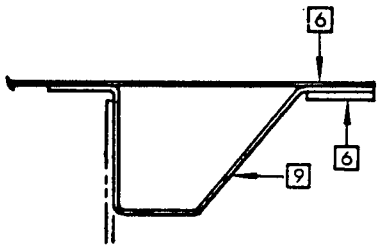

SECTION II

Engine Cowl Structure Identification
Figure 2 (Sheet 2)

ITEM	MATERIAL	REPAIR FIG. NO.
1	0.020 TITANIUM 6AL-4V TYPE III	
2	0.015 TITANIUM 6AL-4V TYPE III	
3	0.063 6061-T4	
4	0.050 TITANIUM 6AL-4V TYPE III	
5	0.020 CRES AISI TYPE 321 OR 347	
6	0.032 TITANIUM 6AL-4V TYPE III	
7	0.10 TITANIUM 6AL-4V TYPE III	
8	BAC1650-3 TITANIUM 6AL-4V TYPE III	
9	0.025 TITANIUM 6AL-4V TYPE III	
10	0.032 CRES AISI TYPE 321	
11	0.050 CRES TYPE 17-7PH	
12	0.040 CRES AISI TYPE 321 OR 347	
13	CSTG 17-4PH AMS 5355	
14	0.020 TITANIUM 6AL-4V TYPE III	54-10-3 FIG 7,8
15	0.025 CRES AISI 301 COMP 301 ANNEALED	
16	0.032 CRES AISI 301 COMP 301 ANNEALED	
17	0.040 CRES AISI 301 COMP 301 ANNEALED	
18	0.040 TITANIUM 6AL-4V TYPE III	
19	0.045 TITANIUM 6AL-4V TYPE III	
20	0.020 CRES AISI 301 COMP 301 ANNEALED	
21	0.032 CRES AISI TYPE 321 OR 347 ANNEALED	
22	0.050 CRES AISI 301 COMP 301 1/4 HARD	
23	BAC1672-4 TITANIUM 6AL-4V TYPE III	
24	0.080 CLAD 2024-T42	

Nacelle to Wing Fairing - Structure Identification
Figure 3 (Sheet 1)

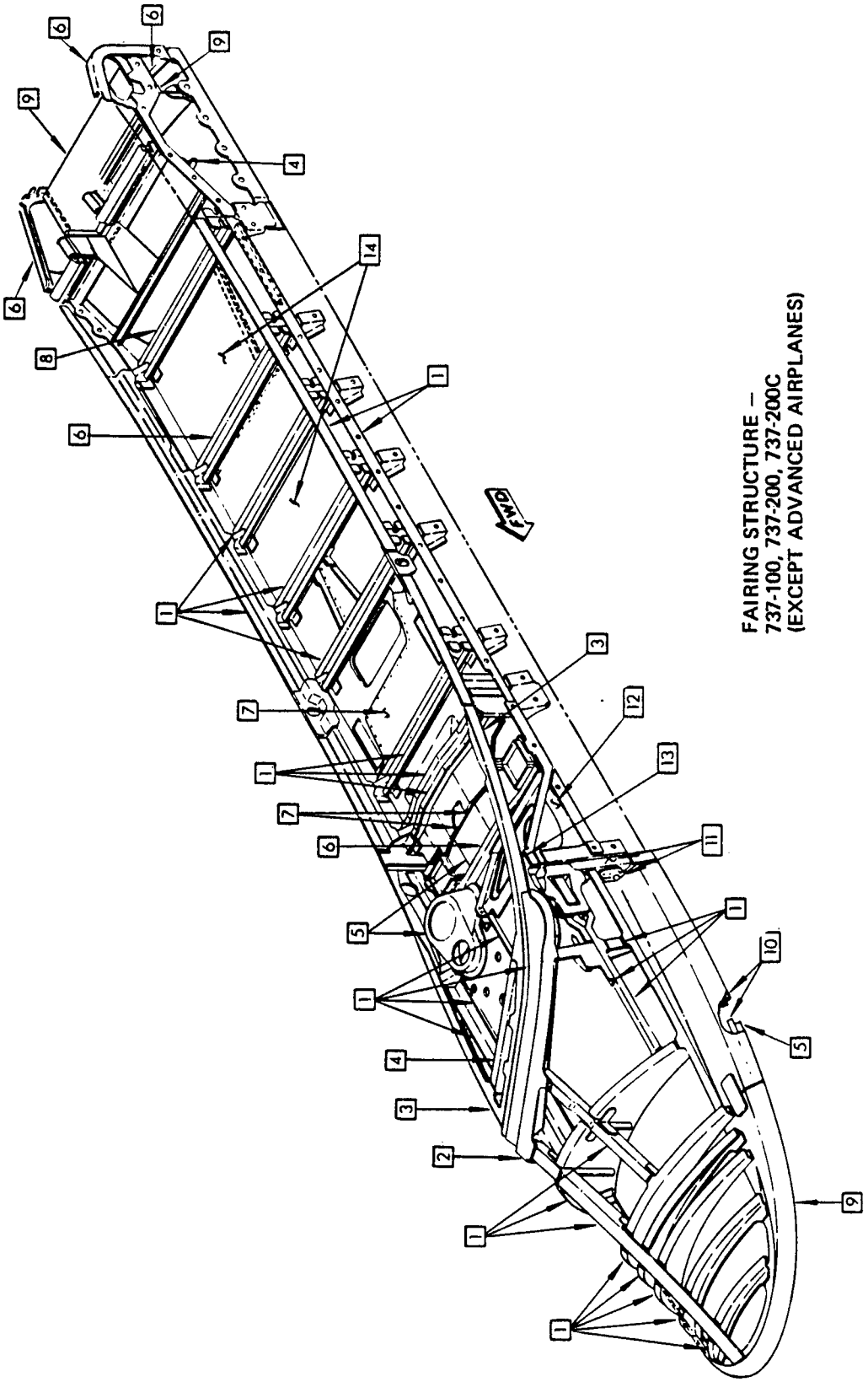

Nacelle to Wing Fairing - Structure Identification
Figure 3 (Sheet 2)

REF DWG
65-46998
65C14094

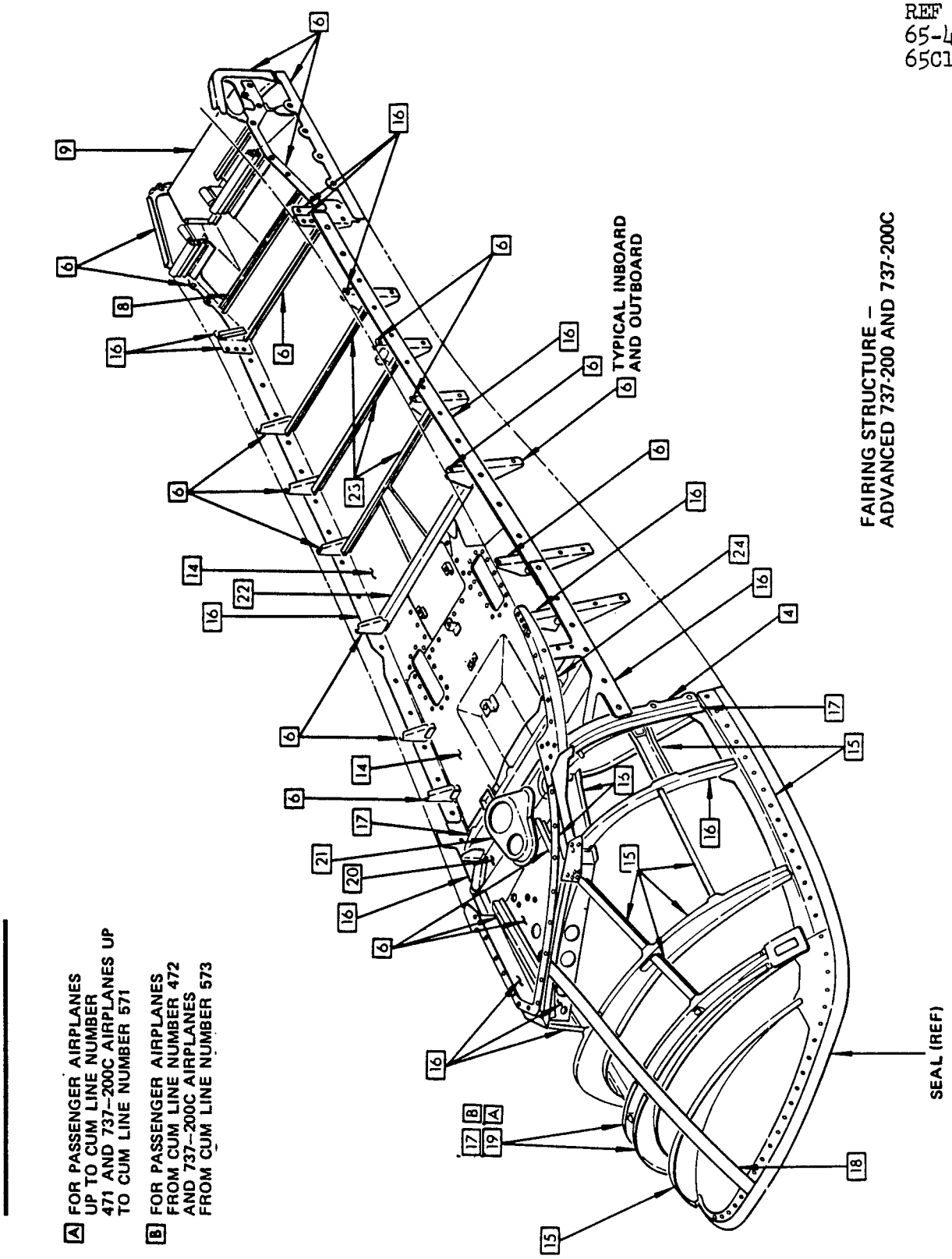

Nacelle to Wing Fairing - Structure Identification
Figure 3 (Sheet 3)

REPAIR INSTRUCTIONS

1. Cut and remove the damaged portion of the skin and frame.
2. Make the repair parts.
3. Assemble the repair parts and drill fastener holes.
4. Remove the repair parts and apply a chemical conversion coating to all the bare edges of the initial and repair parts.
5. Prepare the faying surfaces of the initial and repair parts for bonding.
6. Apply bonding adhesive and install the repair parts and the fasteners.
7. Restore the exterior finish.
8. Fill the gap between part 1 and the initial skin with BMS 5-95 sealant.

NOTES

- THIS REPAIR WILL NOT HAVE AN EFFECT ON A STRUCTURALLY SIGNIFICANT ITEM (SSI) GIVEN IN SRM 51-00-4, FIG. 3. THUS, NO CHANGE TO THE SUPPLEMENTAL STRUCTURAL INSPECTION DOCUMENT (SSID) INSPECTION PROGRAM IS NECESSARY.
- WHEN YOU DO THIS REPAIR, REFER TO:
  - AMM 51-21-0 FOR INTERIOR AND EXTERIOR FINISHES
  - SRM 51-10-2 FOR PROTECTIVE TREATMENT OF METAL
  - SRM 51-30 FOR FASTENER CODE, REMOVAL, INSTALLATION, HOLE SIZES AND EDGE MARGINS
  - SRM 51-40-5 FOR STRUCTURAL BONDING
  - SRM 51-70 FOR AERODYNAMIC SMOOTHNESS REQUIREMENTS.
- BREAK THE SHARP EDGES OF THE INITIAL AND REPAIR PARTS 0.015 TO 0.030 INCH.
- REMOVE ALL NICKS, SCRATCHES, BURRS, SHARP EDGES AND CORNERS FROM INITIAL AND REPAIR PARTS.

FASTENER SYMBOLS

+ INITIAL FASTENER LOCATION

REPAIR FASTENER LOCATION

LOCATION FOR MS20470D5

REPAIR MATERIAL			
PART		QTY	MATERIAL
1	FILLER	1	SAME GAGE AS SKIN, CLAD 2024-T3
2	ANGLE	1	SAME GAGE AS FRAME, CLAD 7075-0, HT-T6
3	ANGLE	1	SAME GAGE AS FRAME, CLAD 7075-0, HT-T6
4	ANGLE	1	SAME GAGE AS FRAME, CLAD 7075-0, HT-T6
5	FILLER	1	SAME GAGE AND DIMENSIONS AS FRAME, CLAD 2024-0 HT-T42

Engine Cowl Repair Below Fire Shield
Figure 1 (Sheet 1 of 2)

BOEING PROPRIETARY - Copyright © - Unpublished Work - See title page for details.

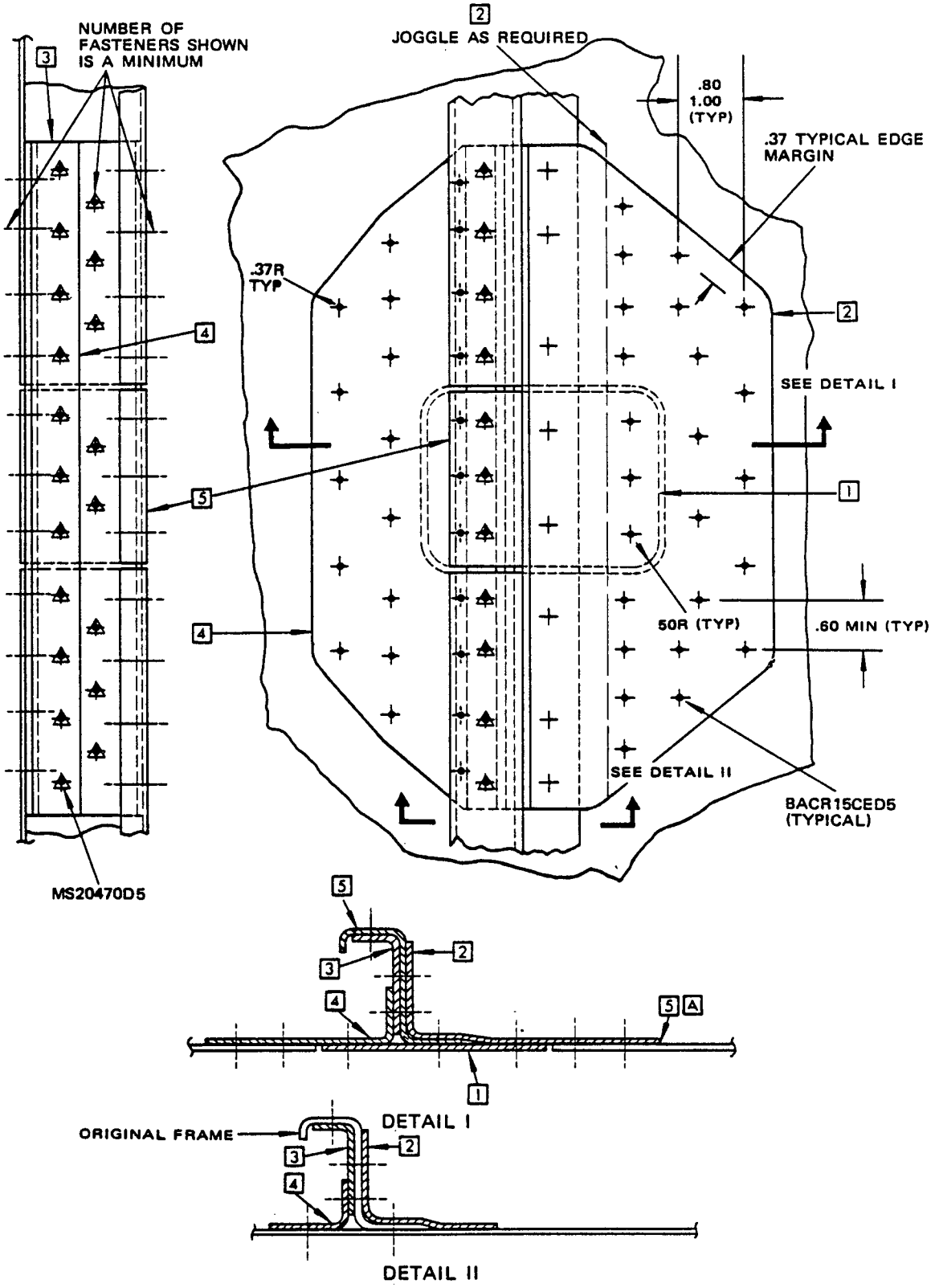

Engine Cowl Repair Below Fire Shield
Figure 1 (Sheet 2 of 2)

REPAIR INSTRUCTIONS

1. Cut and remove the damaged portion of skin and frame.
2. Make the repair parts.
3. Assemble the repair parts and drill the fastener holes.
4. Remove the repair parts and apply a chemical conversion coating to all bare edges of initial and repair parts.
5. Prepare the mating surfaces of initial and repair parts for bonding.
6. Apply the bonding adhesive and install the repair parts and fasteners.
7. Apply the finish.
8. Fill the gap between part [1] and the initial skin with BMS 5-95 sealant.

NOTES

- THIS REPAIR WILL NOT HAVE AN EFFECT ON A STRUCTURALLY SIGNIFICANT ITEM (SSI) GIVEN IN SRM 51-00-4, FIG. 3. THUS, NO CHANGE TO THE SUPPLEMENTAL STRUCTURAL INSPECTION DOCUMENT (SSID) INSPECTION PROGRAM IS NECESSARY.
- WHEN YOU DO THIS REPAIR, REFER TO:
  - AMM 51-21-0 FOR INTERIOR AND EXTERIOR FINISHES
  - SRM 51-10-2 FOR PROTECTIVE TREATMENT OF METAL
  - SRM 51-30 FOR FASTENER CODE, REMOVAL, INSTALLATION, HOLE SIZES AND EDGE MARGINS
  - SRM 51-40-5 FOR STRUCTURAL BONDING
  - SRM 51-70 FOR AERODYNAMIC SMOOTHNESS REQUIREMENTS.
- BREAK THE SHARP EDGES OF THE INITIAL AND REPAIR PARTS 0.015 TO 0.030 INCH.
- REMOVE ALL THE NICKS, SCRATCHES, BURRS, SHARP EDGES AND CORNERS FROM THE INITIAL AND REPAIR PARTS.
- BEFORE INSTALLING ALUMINUM RIVETS IN CORROSION RESISTANT STEEL, APPLY A LAYER OF BMS 10-11, TYPE I PRIMER.

[A] CRES 301 SHEET COMPOSITION 301 ANNEALED

FASTENER SYMBOLS

INITIAL FASTENER LOCATION

REPAIR FASTENER LOCATION

LOCATION FOR MS20470D5

REPAIR MATERIAL			
PART		QTY	MATERIAL
[1]	FILLER	1	SAME GAGE SKIN, CLAD 2024-T3
[2]	FILLER	1	SAME GAGE AND DIMENSIONS AS FRAME, CLAD 7075-0, HT. T6
[3]	ANGLE	1	SAME GAGE AS FRAME [A]
[4]	ANGLE	1	SAME GAGE AS FRAME [A]
[5]	ANGLE	1	SAME GAGE AS FRAME [A]
[6]	FIRE SHIELD	1	0.005 INCH THICK CRES COMPOSITION 302 ANNEALED

Engine Cowl Repair in Area of Fire Shield
Figure 2 (Sheet 1 of 2)

BOEING PROPRIETARY - Copyright © - Unpublished Work - See title page for details.

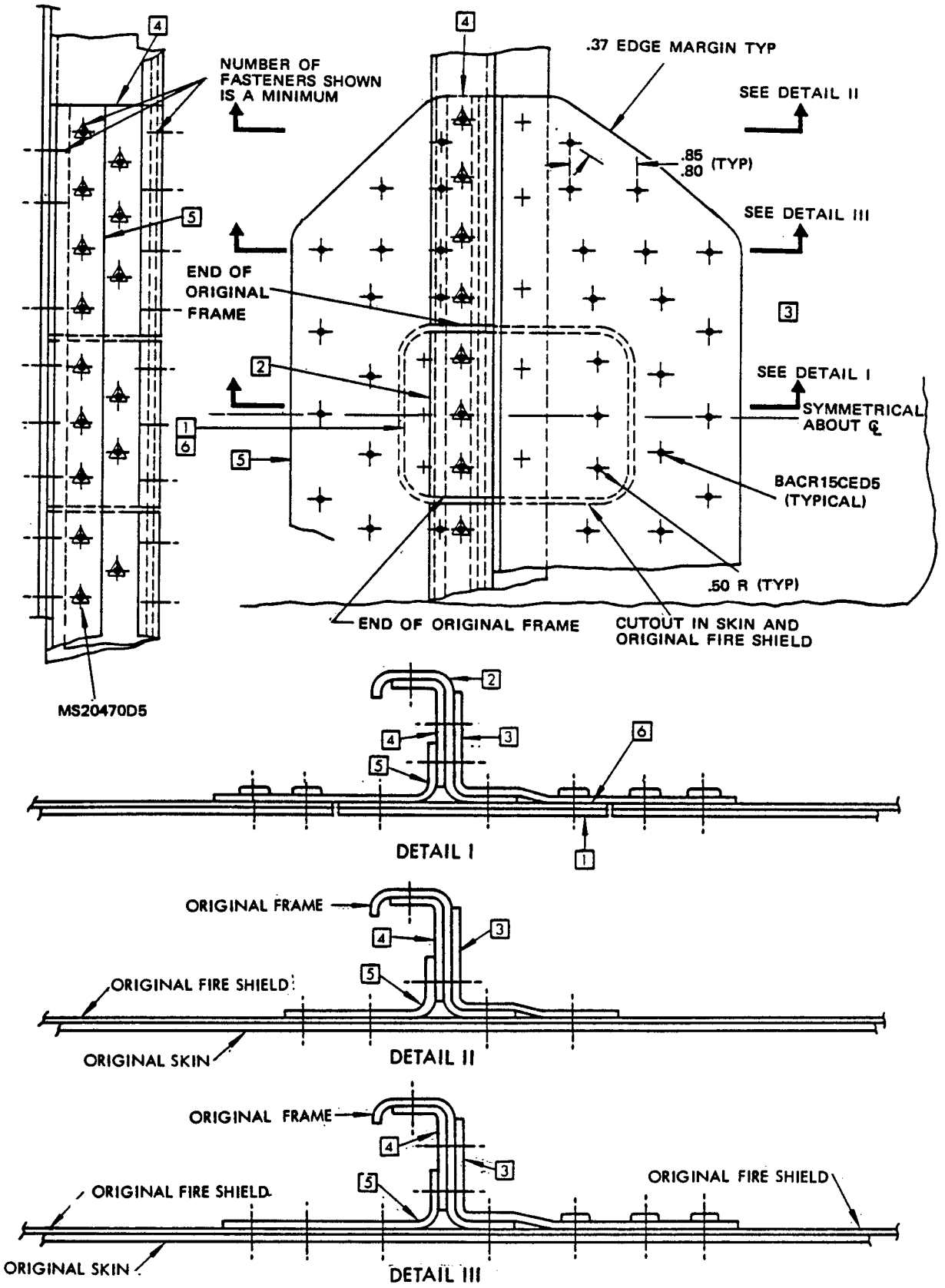

Engine Cowl Repair in Area of Fire Shield
Figure 2 (Sheet 2 of 2)

APPLICABILITY

THIS REPAIR IS APPLICABLE TO CUM LINE NUMBERS 1 THRU 524 THAT HAVE NOT BEEN CHANGED BY SB 71-1045 OR SB 71-1046.

REPAIR INSTRUCTIONS

1. Remove the outer skin panels as necessary, to gain access to the damaged frame.
2. Do an inspection of the frame for evidence of cracks or other damage.
3. Remove the damage. Do what follows, and continue to do the repair steps.
   A. If the flange is damaged cut out only the damaged portion of the flange as required.
   B. If crack damage is evident stop drill with an 0.25 inch diameter hole at the end of the crack.
   C. If these procedures cannot be used, cut out the damaged section and replace with filler parts similar to parts [1], [4], or [6]. When removing damaged parts leave an edge margin for filler parts and remaining sections.
4. Make the parts and form to fit the contour of the frame.
5. Locate and drill the fastener holes to match the initial holes in the frame. Drill initial holes for the repair fasteners as required.
6. Break sharp edges on all repair parts and trimmed initial parts.
7. Cut edges on all repair parts and all trimmed initial parts as given in SRM 51-10-2.
8. Apply a layer to all surfaces of the repair parts with zinc chromate before installation.
9. Install the repair parts and all the fasteners. Replace the web stiffeners.
10. Install the skin panels with fasteners equal in size and type to initial fasteners.
11. Apply the finish as given in AMM 51-21-0.

NOTES

- THIS REPAIR WILL NOT HAVE AN EFFECT ON A STRUCTURALLY SIGNIFICANT ITEM (SSI) GIVEN IN SRM 51-00-4, FIG. 3. THUS, NO CHANGE TO THE SUPPLEMENTAL STRUCTURAL INSPECTION DOCUMENT (SSID) INSPECTION PROGRAM IS NECESSARY.
- DAMAGE IS ASSUMED TO BE TO THE FRAME AT LIP STATION 5.75.
- REFER TO SRM 51-10-2 FOR METAL PROTECTIVE TREATMENT.
- BREAK SHARP EDGES 0.03 ALL REPAIR PARTS AND TRIMMED INITIAL PARTS.
- REFER TO SRM 51-30 FOR FASTENER CODE, REMOVAL AND INSTALLATION, HOLE SIZES AND EDGE MARGINS.
- IT IS RECOMMENDED THAT THE REPAIR INDICATED BE MADE WHEN THE LIP SKIN AND OTHER NOSE COWL SKIN PANELS HAVE BEEN REMOVED FOR OTHER REASONS. ON COMPLETION OF THE REPAIR, ALL LOOSE PARTICLES AND DEBRIS MUST BE REMOVED FROM THE NOSE COWL.
- MINIMUM NUMBER OF FASTENERS REQUIRED FOR EACH SIDE OF DAMAGE AS SHOWN.

FASTENER SYMBOLS

+ INITIAL FASTENER LOCATION. INSTALL THE SAME SIZE AND TYPE FASTENER AS THE INITIAL FASTENER.

⊕ REPAIR FASTENER LOCATION. INSTALL A MS20470-D5 RIVET.

Nacelle Nose Cowl Frame Repair Lip Station 5.75
Figure 3 (Sheet 1)

BOEING PROPRIETARY - Copyright © - Unpublished Work - See title page for details.

REPAIR MATERIAL			
PART		QTY	MATERIAL
1	FILLER	1	.05-CLAD 2024-0 HT-T42
2	ANGLE	1	.063 CLAD 2024-0 HT-T42
3	PLATE	1	.04-CLAD 2024-T3
4	FILLER	1	.05-CLAD 2024-0 HT-T42
5	CHANNEL	1	.063-CLAD 2024-0 HT-T42
6	ANGLE	1	.063-CLAD 2024-0 HT-T42
7	PLATE	1	.063-CLAD 2024-T3

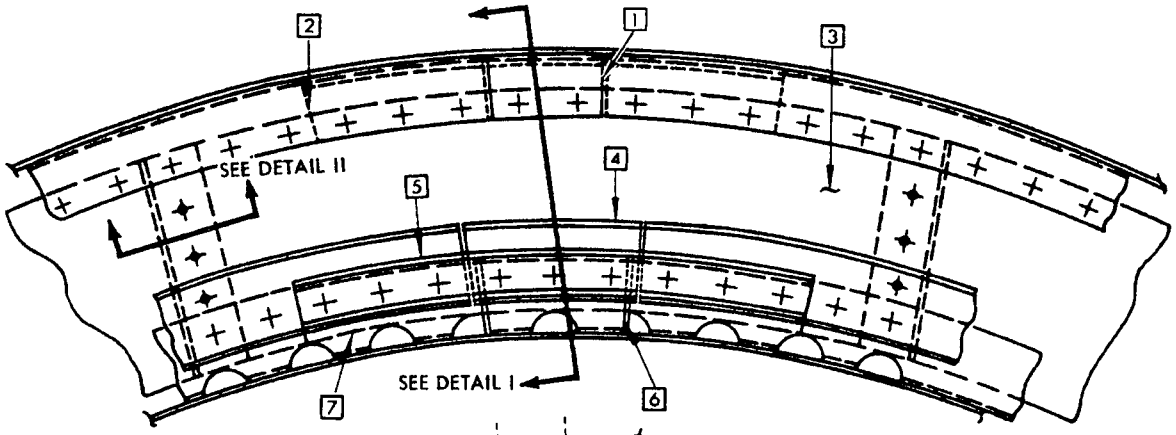

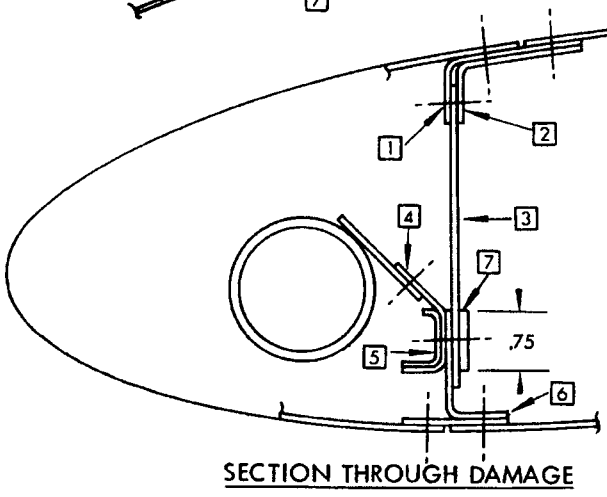

SECTION THROUGH DAMAGE

DETAIL I

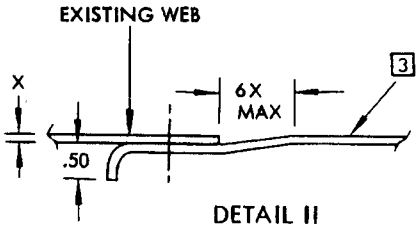

DETAIL II

Nacelle Nose Cowl Frame Repair Lip Station 5.75
Figure 3 (Sheet 2 of 2)

REPAIR INSTRUCTIONS

1. Remove the fasteners from outer skin panels as required to gain access to the damaged frame.
2. Remove the damage. Do what follows:
   A. If the flange is damaged, cut out only the damaged portion of the flange as required.
   B. If crack damage is evident stop drill with an 0.25 inch diameter hole at the end of the crack.
   C. If the above procedures cannot be used, cut out the damaged section and replace with filler parts similar to parts 1 and 2. When removing damaged section leave edge margin at existing fastener locations for filler parts and remaining sections.
3. Make the parts and form to fit the contour of the frame.
4. Locate and drill the fastener holes to match the initial holes in the frame. Drill holes for repair fasteners as necessary.
5. Break the sharp edges 0.03 inch on all repair parts and trimmed initial parts. Remove all loose particles and debris.
6. Apply a chemical conversion coating to the cut edges on all repair parts and all trimmed initial parts as given in SRM 51-10-2.
7. Apply a layer to all surfaces of repair parts with zinc chromate before installation.
8. Install the repair parts and all the fasteners.
9. Apply the finish as given in AMM 51-21-0.

NOTES

- THIS REPAIR WILL NOT HAVE AN EFFECT ON A STRUCTURALLY SIGNIFICANT ITEM (SSI) GIVEN IN SRM 51-00-4, FIG. 3. THUS, NO CHANGE TO THE SUPPLEMENTAL STRUCTURAL INSPECTION DOCUMENT (SSID) INSPECTION PROGRAM IS NECESSARY.
- MINIMUM NUMBER OF FASTENERS NECESSARY FOR EACH SIDE OF DAMAGE AS SHOWN.
- DAMAGE IS ASSUMED TO BE TO THE FRAME AT NACELLE STATION 99.25.
- REFER TO SRM 51-10-2 FOR METAL PROTECTIVE TREATMENT.
- REFER TO SRM 51-30 FOR FASTENER CODE, REMOVAL AND INSTALLATION HOLE SIZES AND EDGE MARGINS.

FASTENER SYMBOLS

+ INITIAL FASTENER LOCATION. SAME SIZE AND TYPE AS INITIAL FASTENER.

✚ REPAIR FASTENER LOCATION FOR MS20470D5 FASTENERS.

REPAIR MATERIAL			
PART		QTY	MATERIAL
1	FILLER	1	ALTER BAC 1506-1524 2024-T42
2	FILLER	1	0.05 INCH THICK CLAD 2024-T42
3	ANGLE	1	0.05 INCH THICK CLAD 2024-T42
4	ANGLE	1	0.05 INCH THICK CLAD 2024-T42
5	PLATE	1	0.04 INCH THICK CLAD 2024-T3
6	ANGLE	1	0.063 INCH THICK CLAD 2024-T42

Nacelle Nose Cowl Frame Repair at Nacelle Station 99.25
Figure 4 (Sheet 1)

BOEING PROPRIETARY - Copyright © - Unpublished Work - See title page for details.

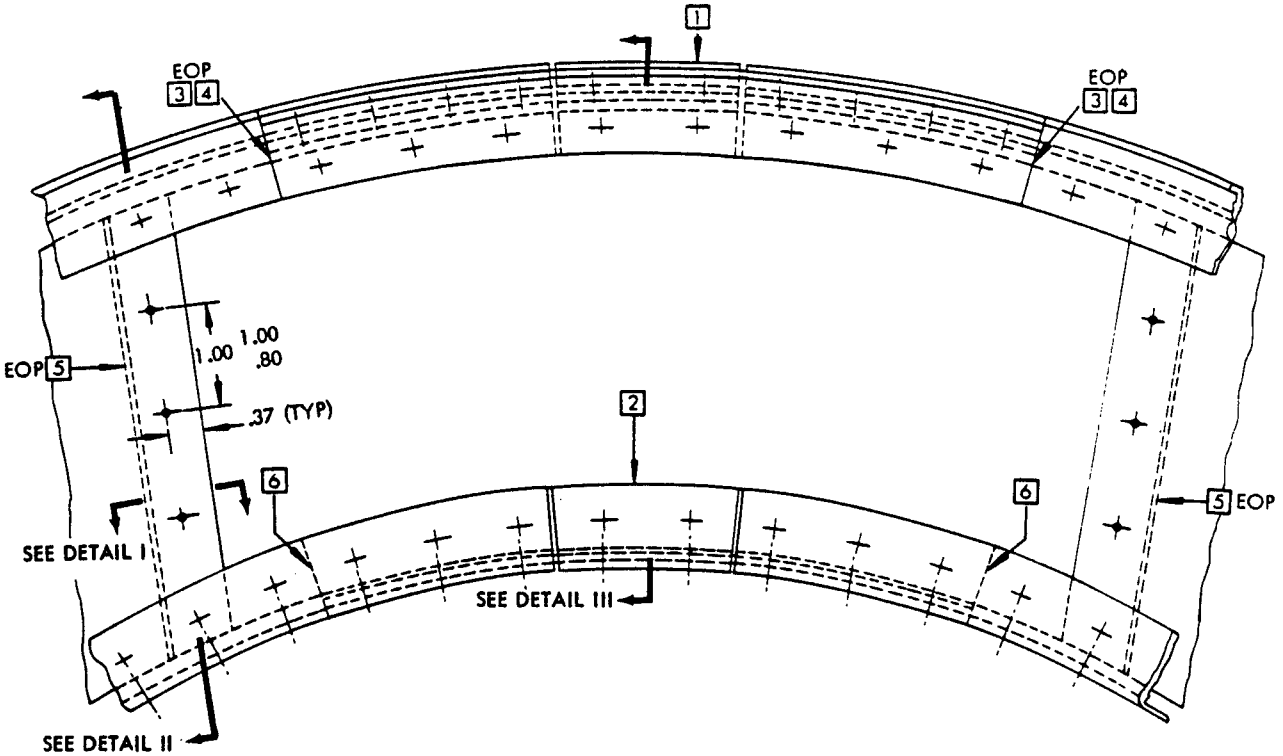

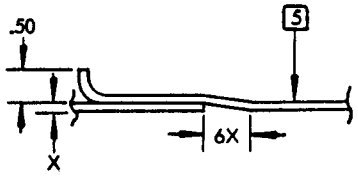

DETAIL I

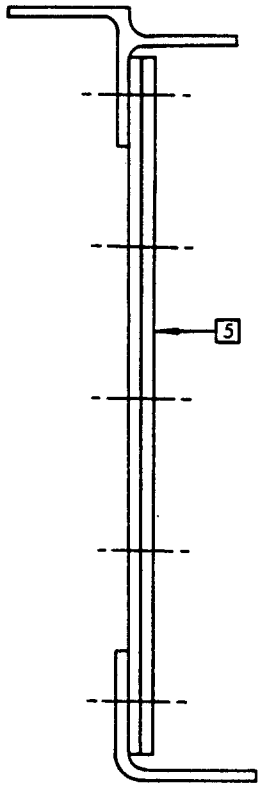

DETAIL II

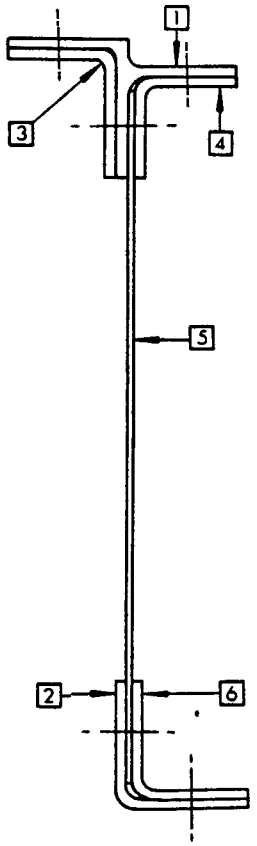

DETAIL III

Nacelle Nose Cowl Frame Repair at Nacelle Station 99.25
Figure 4 (Sheet 2 of 2)

APPLICABILITY
THIS REPAIR IS APPLICABLE TO BLOW-IN DOOR NOSE COWL

REPAIR INSTRUCTIONS

1. Remove the inner skin fasteners as necessary to install the repair parts.
2. Remove the damaged section of the extrusion.
3. Make repair parts [1] and [2] .
4. If a bearing plate has been removed with the damaged section of the extrusion, machine the opening in parts [1] and [2] to match the position if the hole in the initial bearing plate.
5. Assemble the repair parts and drill the fastener holes.
6. Apply a chemical conversion coating to repair part [2] and the reworked surfaces of the ring extrusion.
7. Install the repair parts and all the fasteners.
8. Apply the finish as given in AMM 51-20-0.

NOTES

- THIS REPAIR WILL NOT HAVE AN EFFECT ON A STRUCTURALLY SIGNIFICANT ITEM (SSI) GIVEN IN SRM 51-00-4, FIG. 3. THUS, NO CHANGE TO THE SUPPLEMENTAL STRUCTURAL INSPECTION DOCUMENT (SSID) INSPECTION PROGRAM IS NECESSARY.
- REFER TO FIG. 10 FOR ENGINES WITH FAT LIP NOSE COWL.
- REFER TO SRM 51-10-2 FOR PROTECTIVE TREATMENT OF METAL.
- BREAK THE SHARP EDGES 0.015 TO 0.03 INCH R ON THE REPAIR PARTS AND THE TRIMMED INITIAL PARTS.
- REFER TO SRM 51-30 FOR FASTENER CODE, REMOVAL AND INSTALLATION, HOLE SIZES AND EDGE MARGINS.
- MINIMUM NUMBER OF FASTENERS NECESSARY FOR EACH SIDE OF DAMAGE AS SHOWN.

[A] REFER TO SRM 51-10-2, PARAGRAPH 6.

FASTENER SYMBOLS

+ INITIAL FASTENER LOCATION. INSTALL THE SAME TYPE AND SIZE FASTENER AS THE INITIAL FASTENER.

⊕ REPAIR FASTENER LOCATION. INSTALL A MS20426D6 RIVET.

REPAIR MATERIAL			
PART		QTY	MATERIAL
[1]	ANGLE	1	0.04 INCH THICK 17-7PH CRES SHEET, HT TR 180-200 KSI
[2]	FILLER	1	BAC1514-1161 2024-T42 EXTRUSION

Repair to Engine Attachment Ring at Engine Station 103.82
Figure 5 (Sheet 1)

BOEING PROPRIETARY - Copyright © - Unpublished Work - See title page for details.

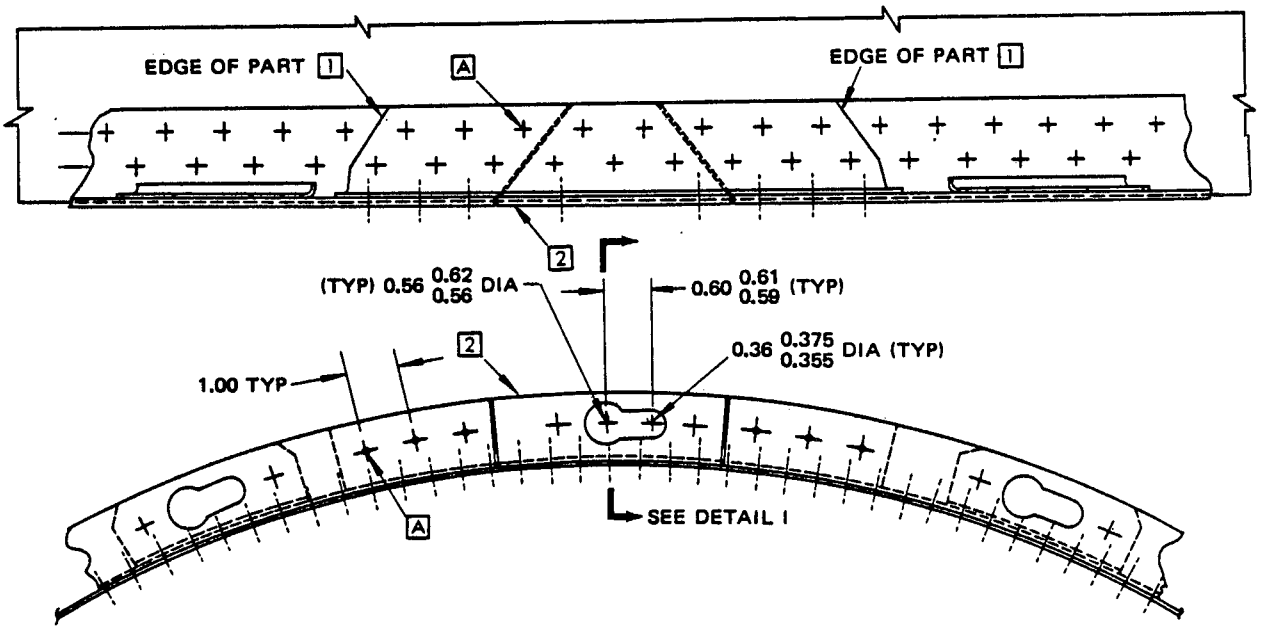

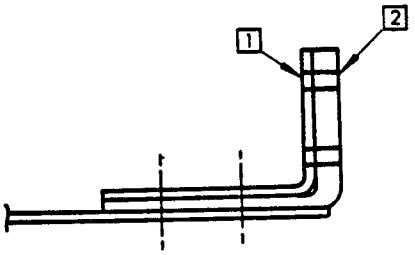

SECTION THROUGH REPAIR

DETAIL I

Repair to Engine Attachment Ring at Engine Station 103.82
Figure 5 (Sheet 2)

REPAIR INSTRUCTIONS

1. Trim the damaged longeron in the shape of a rectangle. Remove all burrs, nicks, scratches or sharp edges from the damaged area.
2. Make the repair parts.
3. Assemble the parts and drill fastener holes as shown.
4. Remove all loose particles and debris.
5. Apply a chemical conversion coating to all the bare surfaces of the repair parts and longeron as given in SRM 51-10-2.
6. Install the repair parts.
7. Apply the finish as given in AMM 51-21-0.

NOTES

- THIS REPAIR WILL NOT HAVE AN EFFECT ON A STRUCTURALLY SIGNIFICANT ITEM (SSI) GIVEN IN SRM 51-00-4, FIG. 3. THUS, NO CHANGE TO THE SUPPLEMENTAL STRUCTURAL INSPECTION DOCUMENT (SSID) INSPECTION PROGRAM IS NECESSARY.
- DAMAGE TO THE LONGERON IS ASSUMED.
- REFER TO SRM 51-10-2 FOR METAL PROTECTIVE TREATMENT.
- BREAK SHARP EDGES 0.015-0.030 INCH FOR THE INITIAL AND REPAIR PARTS.
- REFER TO SRM 51-30 FOR FASTENER CODE, REMOVAL AND INSTALLATION, HOLE SIZES AND EDGE MARGIN.
- THIS REPAIR MUST BE DONE WHEN THE OUTER COWL IS REMOVED.

FASTENER SYMBOLS

+ INITIAL FASTENER LOCATION. SAME TYPE AND DIAMETER AS THE INITIAL FASTENER.

✚ REPAIR FASTENER LOCATION FOR MS20470D5 FASTENERS.

REPAIR MATERIAL			
PART		QTY	MATERIAL
1	SPLICE ANGLE	1	0.050 INCH THICK CLAD 2024-0 HT-T42
2	SPLICE PLATE	1	0.020 INCH THICK CLAD 2024-T3
3	FILLER ANGLE	1	CLAD 2024-0 HT-T42
4	STRAP	1	0.05 INCH THICK CLAD 2024-T3

Nose Cowl Structure Longeron Repair
Figure 6 (Sheet 1)

BOEING PROPRIETARY - Copyright © - Unpublished Work - See title page for details.

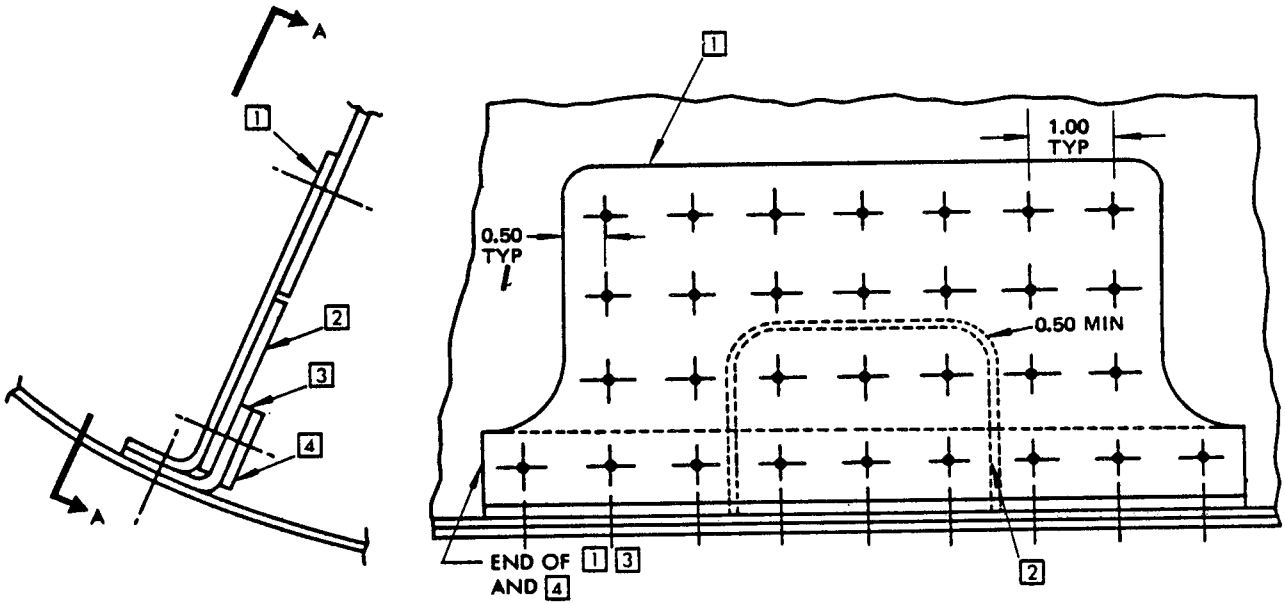

ROTATED COUNTER CLOCKWISE 21°

SECTION A–A

Nose Cowl Structure Longeron Repair
Figure 6 (Sheet 2)

REPAIR INSTRUCTIONS

1. Trim the damaged web in the shape of a rectangle. Remove all the burrs, nicks, scratches or sharp edges from the damaged area.
2. Make repair parts.
3. Assemble the parts and drill fastener holes as required.
4. Install the repair parts.
5. Make a fire seal on the lower (hot) side only of the repair parts and fasteners as given in AMM 51-30-0.
6. Apply the finish as given in AMM 51-21-0.

NOTES

- THIS REPAIR WILL NOT HAVE AN EFFECT ON A STRUCTURALLY SIGNIFICANT ITEM (SSI) GIVEN IN SRM 51-00-4, FIG. 3. THUS, NO CHANGE TO THE SUPPLEMENTAL STRUCTURAL INSPECTION DOCUMENT (SSID) INSPECTION PROGRAM IS NECESSARY.
- BREAK IN THE WEB IS ASSUMED.
- REFER TO SRM 51-10-2 FOR METAL PROTECTIVE TREATMENT.
- BREAK SHARP EDGES 0.03 INCH ON ALL THE INITIAL AND REPAIR PARTS.
- REFER TO SRM 51-30 FOR FASTENER CODE, REMOVAL AND INSTALLATION, HOLE SIZES AND EDGE MARGINS.

[A] MAKE THE REPAIR PARTS ONE GAGE THICKER THAN THE WEB (0.040 INCH THICK MINIMUM).

FASTENER SYMBOL

✚ REPAIR FASTENER LOCATION FOR MS20615-M5() FASTENERS.

REPAIR MATERIAL			
PART		QTY	MATERIAL
1	CHANNEL	1	CRES, TYPE AISI 302, CONDITION ANNEALED [A]
2	ANGLE	4	CRES, TYPE AISI 302, CONDITION ANNEALED [A]

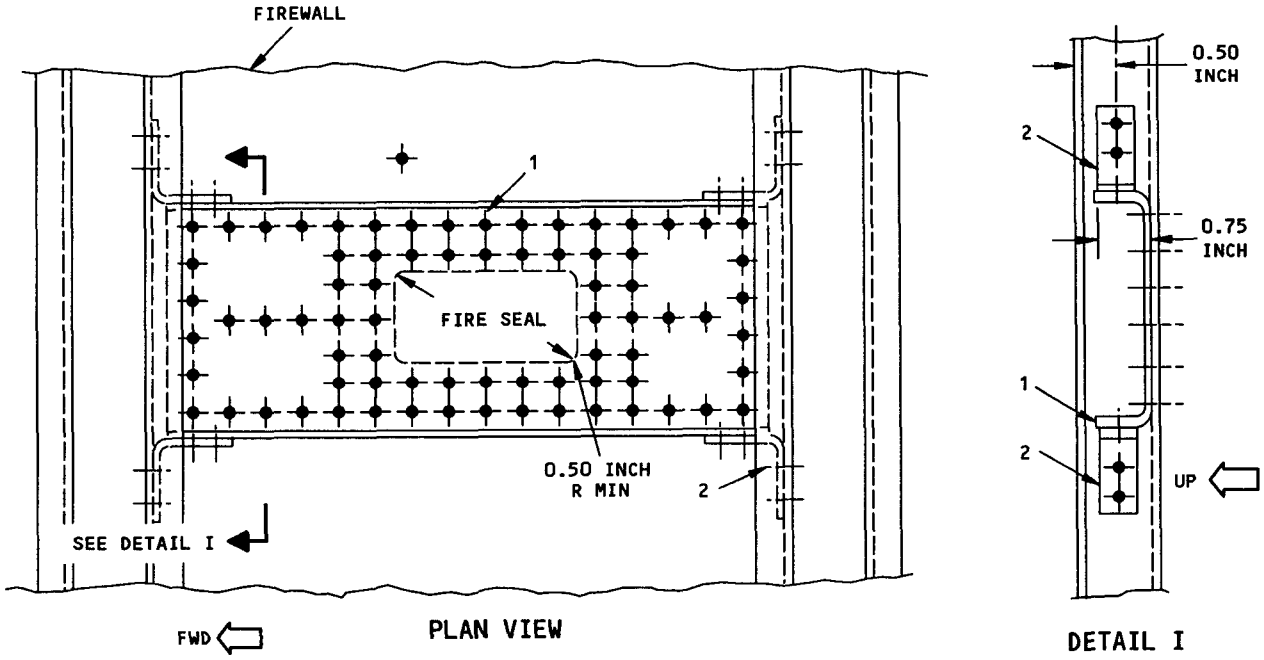

Nacelle Firewall Web Repair
Figure 7

BOEING PROPRIETARY - Copyright © - Unpublished Work - See title page for details.

REPAIR INSTRUCTIONS

1. Trim the damaged firewall in the shape of a rectangle. Remove all the burrs, nicks, scratches or sharp edges from the damaged area.
2. Make the repair parts.
3. Assemble the parts and drill fastener holes as shown.
4. Install the repair parts.
5. Make a fire sealant installation on the lower (hot) side only, as given in AMM 51-31-0.
6. Apply the finish as given in AMM 51-21-0.

NOTES

- THIS REPAIR WILL NOT HAVE AN EFFECT ON A STRUCTURALLY SIGNIFICANT ITEM (SSI) GIVEN IN SRM 51-00-4, FIG. 3. THUS, NO CHANGE TO THE SUPPLEMENTAL STRUCTURAL INSPECTION DOCUMENT (SSID) INSPECTION PROGRAM IS NECESSARY.
- DAMAGE IS ASSUMED IN VICINITY OF A LONGERON.
- REFER TO SRM 51-10-2 FOR METAL PROTECTIVE TREATMENT.
- BREAK SHARP EDGES 0.015 TO 0.030 INCH ON ALL THE INITIAL AND REPAIR PARTS.
- REFER TO SRM 51-30 FOR FASTENER CODE, REMOVAL AND INSTALLATION, HOLE SIZES AND EDGE MARGIN.

FASTENER SYMBOLS

+ INITIAL FASTENER LOCATION. SAME TYPE AND DIAMETER AS THE INITIAL FASTENER.

✚ REPAIR FASTENER LOCATION FOR MS20615-M5 FASTENERS.

REPAIR MATERIAL			
PART		QTY	MATERIAL
1	PLATE	1	CRES, TYPE AISI 302, 0.040 INCH THICK, CONDITION ANNEALED
2	SPLICE PLATE	1	CRES, TYPE AISI 302, 0.040 INCH THICK, CONDITION ANNEALED
3	FILLER		CRES, TYPE AISI 302, 0.020 INCH THICK, CONDITION ANNEALED
4	SPLICE PLATE	1	CRES, TYPE AISI 302, 0.040 INCH THICK, CONDITION ANNEALED
5	FILLER ANGLE	1	CRES, TYPE AISI 302, 0.020 INCH THICK, CONDITION ANNEALED

Firewall Repair - Wing to Nacelle Structure
Figure 8 (Sheet 1)

BOEING PROPRIETARY - Copyright © - Unpublished Work - See title page for details.

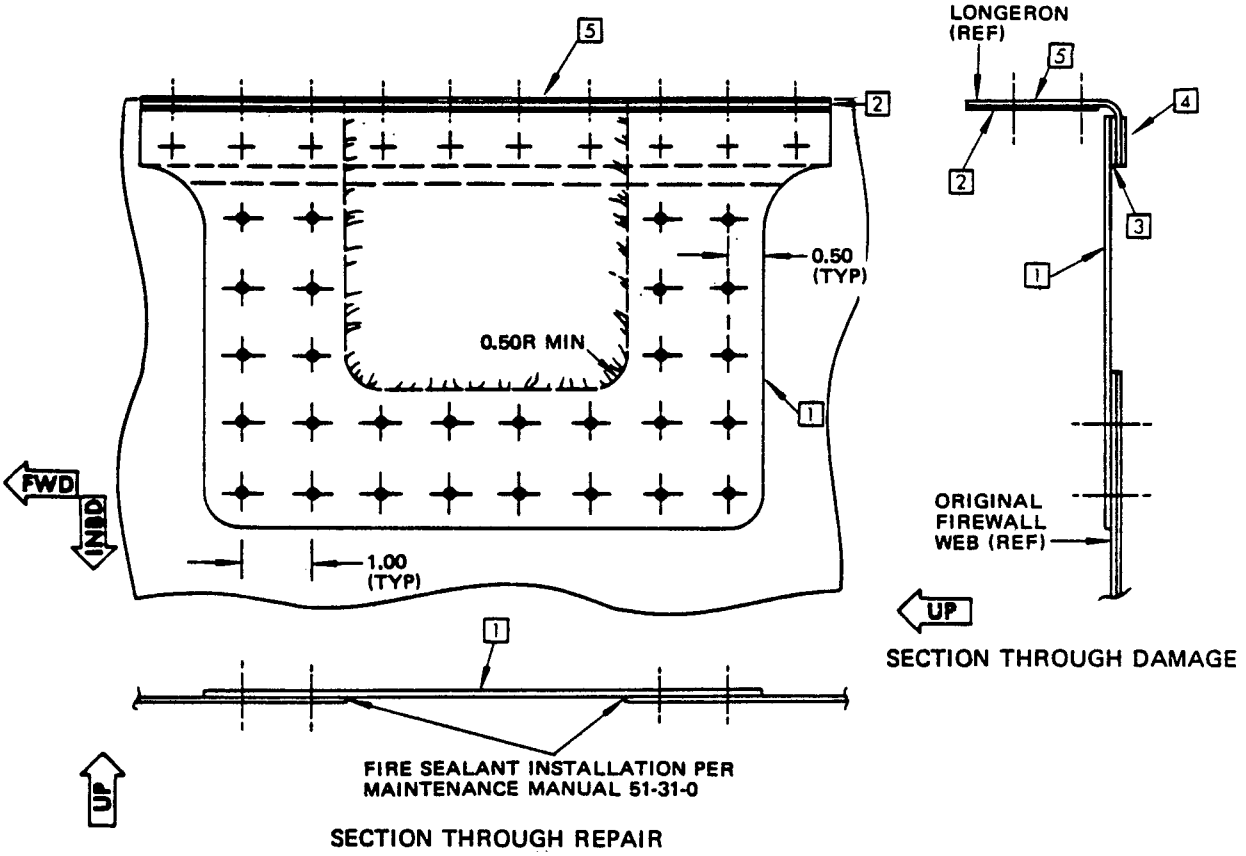

Firewall Repair - Wing to Nacelle Structure
Figure 8 (Sheet 2)

REPAIR INSTRUCTIONS

1. Remove the fasteners as necessary to gain access to the repair area.
2. Temporarily, insert a corrosion resistant steel plate under all cracks in the firewall.
3. Drill a 0.25 inch stop hole a minimum of 0.12 inch past the ends of all cracks.
4. Make the repair parts as shown in the details.
5. Assemble the parts and drill the necessary holes in the repair parts.
6. Install the repair parts.
7. Make a fire sealant installation as given in AMM 51-31-0.

NOTES

- THIS REPAIR WILL NOT HAVE AN EFFECT ON A STRUCTURALLY SIGNIFICANT ITEM (SSI) GIVEN IN SRM 51-00-4, FIG. 3. THUS, NO CHANGE TO THE SUPPLEMENTAL STRUCTURAL INSPECTION DOCUMENT (SSID) INSPECTION PROGRAM IS NECESSARY.
- THIS REPAIR MAY BE USED TO REINFORCE FIREWALL PANELS, WHEN CRACKS HAVE DEVELOPED IN THE AREA OF BULKHEAD FITTINGS.
- REMOVE NICKS, BURRS, SCRATCHES, SHARP EDGES AND CORNERS FROM THE INITIAL AND REPAIR PARTS.
- ALL DIMENSIONS ARE SHOWN IN INCHES.
- REFER TO THE FOLLOWING WHEN USING THIS REPAIR:
  - AMM 51-31-0 FOR SEALS AND SEALING
  - SRM 51-30 FOR FASTENER CODE, INSTALLATION, REMOVAL, HOLE SIZES AND EDGE MARGINS.

FASTENER SYMBOLS

+ INITIAL FASTENER LOCATION. REINSTALL SAME TYPE AND DIAMETER FASTENER AS REMOVED.

⊕ REPAIR FASTENER LOCATION. INSTALL MS20615M10.

REPAIR MATERIAL			
PART		QTY	MATERIAL
1	ANGLE	1	0.032 INCH THICK CRES, TYPE AISI 302, CONDITION ANNEALED OPTIONAL: TYPE AISI 321 OR 347
2	DOUBLER	1	0.032 INCH THICK CRES, TYPE AISI 302, CONDITION ANNEALED OPTIONAL: TYPE AISI 321 OR 347
3	FILLER	1	0.032 INCH THICK CRES, TYPE AISI 302, CONDITION ANNEALED OPTIONAL: TYPE AISI 321 OR 347

Nacelle Mid-fairing - Firewall Repair
Figure 9 (Sheet 1)

BOEING PROPRIETARY - Copyright © - Unpublished Work - See title page for details.

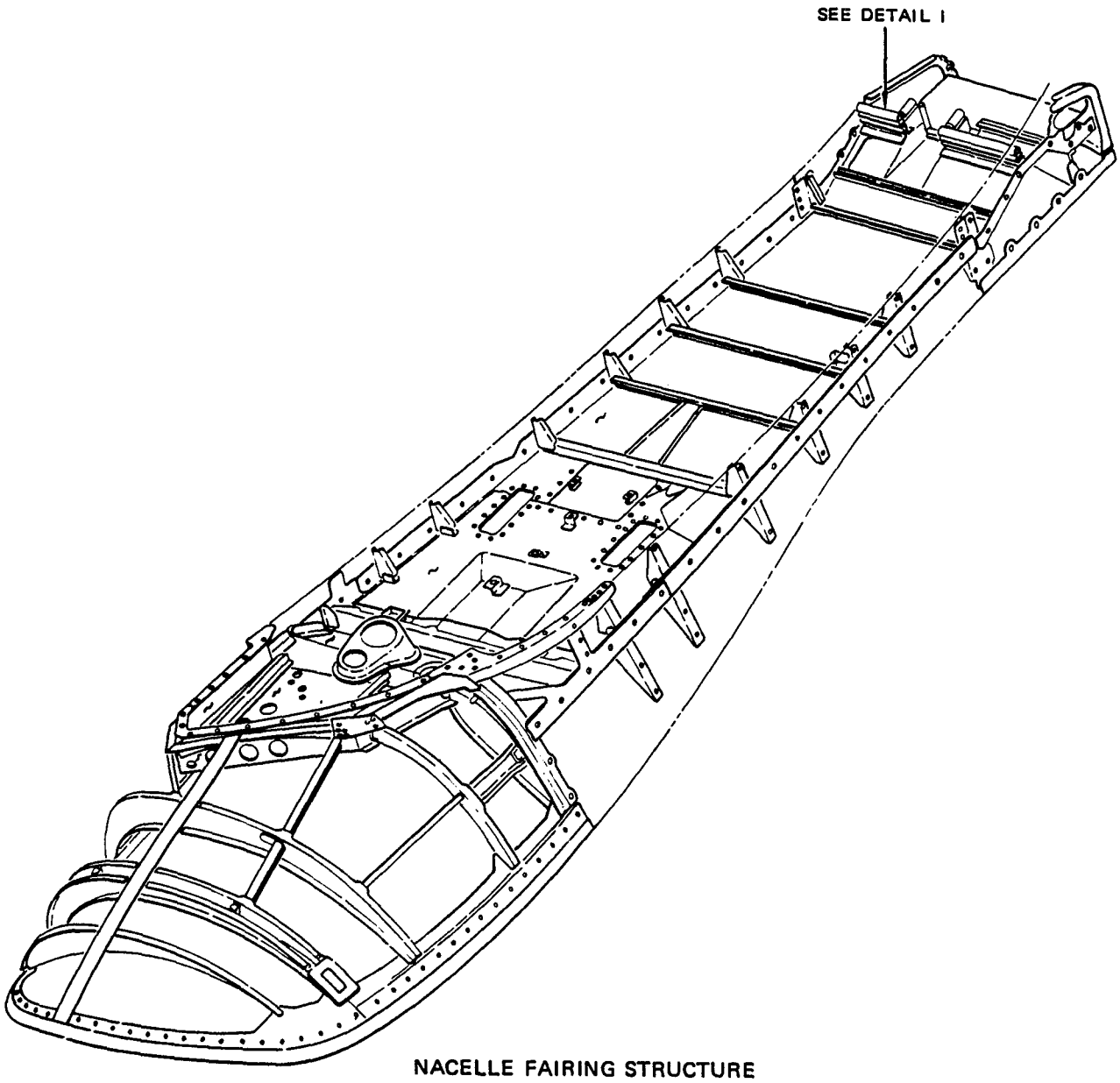

Nacelle Mid-Fairing - Firewall Repair
Figure 9 (Sheet 2)

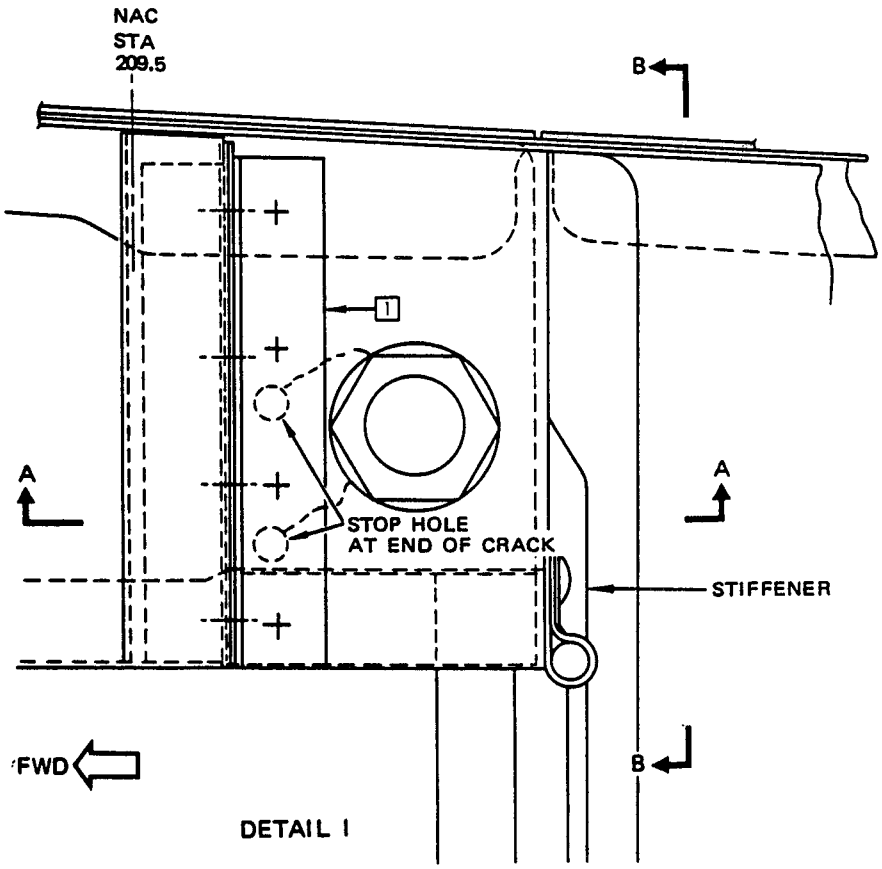

DETAIL I

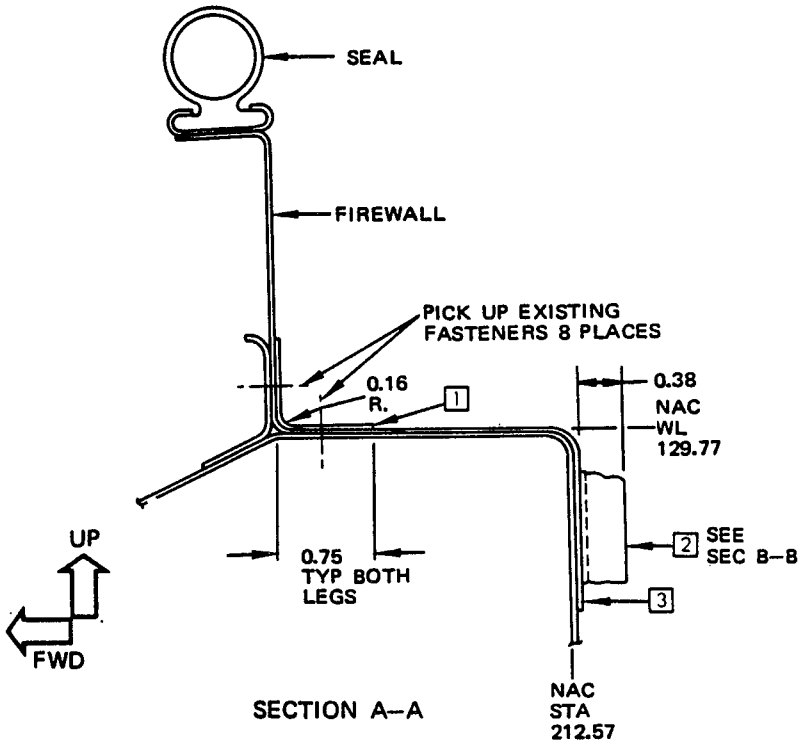

SECTION A–A

Nacelle Mid-Fairing - Firewall Repair
Figure 9 (Sheet 3)

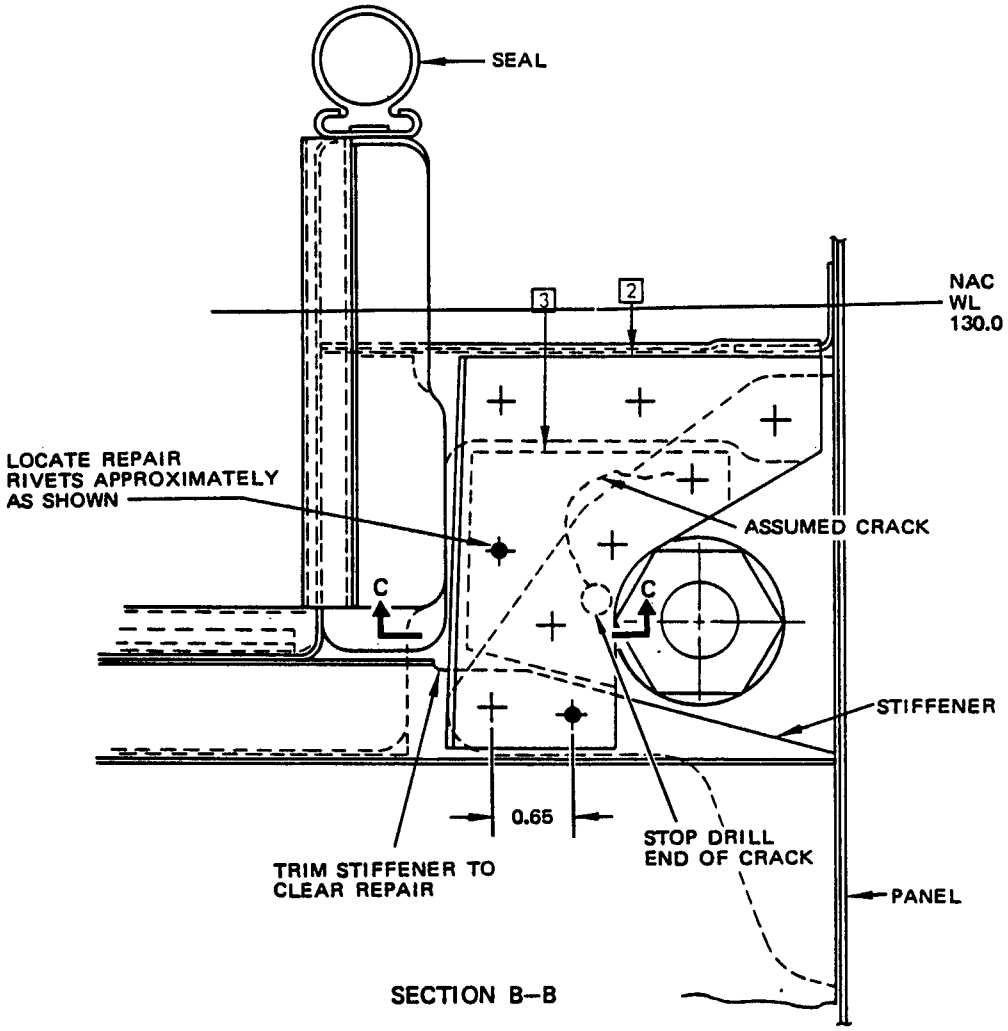

SECTION B–B

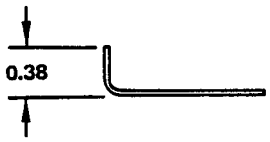

PART 2 SHOWN ONLY

SECTION C–C

Nacelle Mid-Fairing - Firewall Repair
Figure 9 (Sheet 4)

APPLICABILITY
THIS REPAIR IS APPLICABLE TO THE ATTACHMENT RING WHERE THE DAMAGE IS AS FOLLOWS: - CRACKS IN THE ATTACHMENT RING FLANGE THAT ARE NOT MORE THAN 1.90 INCHES FROM THE SIDE OF THE ATTACHMENT HOLES, OR - CORRODED OR ELONGATED ATTACHMENT HOLES IN THE ATTACHMENT FLANGE THAT ARE LESS THAN 0.55 INCH IN DIAMETER AFTER DAMAGE CLEAN UP.

REPAIR INSTRUCTION

1. Get access to the damaged area. Refer to AMM 71-11-31.
2. Use Repair 1 if there is only corrosion or elongation in the attachment holes and if the hole diameter is less than 0.55 inch after damage clean up.
3. Use Repair 2 if there are cracks in the attachment ring flange at the attachment holes.

REPAIR 1:

1. Remove the damaged area of the attachment flange as given in SRM 51-10-1.
2. Do a High Frequency Eddy Current inspection around the hole. Make sure there are no more damage. Refer to NDT Part 6, 51-00-00, Fig. 4.
3. Ream the hole as given in SRM 51-10-1.
4. Make the repair Part 4 (straight shank freeze plug). Make sure the outer diameter of the freeze plug is 1.0035 to 1.0040 times larger than the reamed attachment hole diameter. See Table I and refer to SRM 51-10-9.
5. Make the Part 3 (radius filler). See Detail II and Table I.
6. Apply a chemical conversion coating to the repair parts and to the bare surfaces of the initial part. Refer to SRM 51-10-2.
7. Install the Part 4 (freeze plug) into the prepared hole as given in SRM 51-10-9.
8. Drill a 0.359/0.379 inch dia hole in the freeze plug.
9. Apply a chemical conversion coating to the bare surfaces of the hole.
10. Apply one layer of BMS 10-11, Type I primer to the radius filler and to the surfaces of the initial parts. Refer to SOPM 20-41-02.
11. Restore the finish as given in SOPM 20-41-04.
12. Install the Nose Cowl using radius filler under the attach bolt head. Torque the attach bolts to 120-155 inch-pound. Refer to AMM 71-11-31.

REPAIR 2:

1. Drill 0.25 inch diameter stop holes at the ends of the cracks.
2. If there is a corrosion or elongation in the attachment holes, drill and ream the hole to a minimum 0.475 inch diameter.
3. Do a High Frequency Eddy Current inspection around the hole and at the stop holes. Make sure there is no more damage. Refer to NDT Part 6, 51-00-00, Fig. 4
4. Make the repair Parts 1 and 3 (repair angle and radius filler). Make sure the repair angle radius matches the engine attachment ring radius. See Detail I, II and Table I.
5. Make the Part 2 (spacer) if there is corrosion or elongation in the attachment holes. See Detail III and Table I. Make sure the spacer outer diameter is 0.001 to 0.002 inch less than the repaired attach hole diameter.
6. Apply a chemical conversion coating to the spacer. Refer to SRM 51-10-2.
7. Install the spacer into the prepared hole using BMS 5-36C Type I, Grade 1 or equivalent cement.
8. Assemble the repair angle and drill the fastener holes, and attachment hole.
9. Disassemble the repair angle.
10. Remove the nicks, scratches, gouges, burrs, and sharp edges from the repair parts and the initial parts.
11. Apply a chemical conversion coating to the bare surfaces of the initial part, radius filler, and the spacer. Refer to SRM 51-10-2.
12. Apply one layer of BMS 10-11, Type I primer to the repair angle, radius filler, and to the surfaces of the initial part. Refer to SOPM 20-41-02.
13. Install the repair parts with BMS 5-95 sealant between mating surfaces.

Fat Lip Nose Cowl - Station 103.82 Engine Attachment Ring Repair
Figure 10 (Sheet 1)

BOEING PROPRIETARY - Copyright © - Unpublished Work - See title page for details.

REPAIR 2: (CONT)

14. Install the fasteners wet with BMS 5-95 sealant.
15. Restore the finish as shown in SOPM 20-41-04.
16. Install the Nose Cowl using radius filler under the attach bolt head. Torque the attach bolts to 120-155 inch-pound. Refer to AMM 71-11-31.

NOTES

- THIS REPAIR WILL NOT HAVE AN EFFECT ON A STRUCTURALLY SIGNIFICANT ITEM (SSI) GIVEN IN SRM 51-00-4, FIG. 3. THUS, NO CHANGE TO THE SUPPLEMENTAL STRUCTURAL INSPECTION DOCUMENT (SSID) INSPECTION PROGRAM IS NECESSARY.
- D = FASTENER DIAMETER
- ALL DIMENSIONS ARE IN INCHES UNLESS OTHERWISE STATED.
- BREAK ALL SHARP EDGES.
- WHEN YOU USE THIS REPAIR REFER TO:
  - AMM 71-11-31 FOR ENGINE NOSE COWL - REMOVAL AND INSTALLATION
  - NDT PART 6, 51-00-00 FOR HOLE INSPECTION
  - SOPM 20-41-02 FOR APPLICATION OF CHEMICAL AND SOLVENT RESISTANT FINISHES
  - SOPM 20-41-04 FOR APPLICATION OF INTERIOR DECORATIVE FINISHES
  - SRM 51-10-1 FOR HOLE PREPARATION FOR DAMAGE
  - SRM 51-10-2 FOR PROTECTIVE TREATMENT OF METALLIC AND GRAPHITE MATERIALS
  - SRM 51-10-9 FOR FREEZE PLUG INSTALLATION
  - SRM 51-20-1 FOR SHEET METAL MATERIALS
  - SRM 51-20-4 FOR REPAIR SEALING
  - SRM 51-30 FOR FASTENER CODE REMOVAL AND INSTALLATION, HOLE SIZES AND EDGE MARGINS.

[A] ONE FOR EACH REPAIRED HOLE COVERED BY THE REPAIR ANGLE.

[B] ONE FOR EACH REPAIRED HOLE.

[C] ONE FOR EACH REPAIRED HOLE NOT COVERED BY THE REPAIR ANGLE.

FASTENER SYMBOLS

+ REPAIR FASTENER LOCATION. INSTALL A MS20427M6 MONEL RIVET.

REPAIR MATERIAL			
PART		QTY	MATERIAL
1	ANGLE	1	0.080, 17-7PH CRES, ANNEALED, HT 180-200KSI
2	SPACER	[A]	0.625 DIAMETER, 7075-T6 ALUMINUM ROD
3	RADIUS FILLER	[B]	0.090, 2024-T3 BARE OR CLAD ALUMINUM SHEET
4	STRAIGHT SHANK FREEZE PLUG	[C]	0.625 DIAMETER, 7075-T6 ALUMINUM ROD
5	BOLT	[B]	MS9148-09

TABLE I

Fat Lip Nose Cowl - Station 103.82 Engine Attachment Ring Repair
Figure 10 (Sheet 2)

BOEING PROPRIETARY - Copyright © - Unpublished Work - See title page for details.

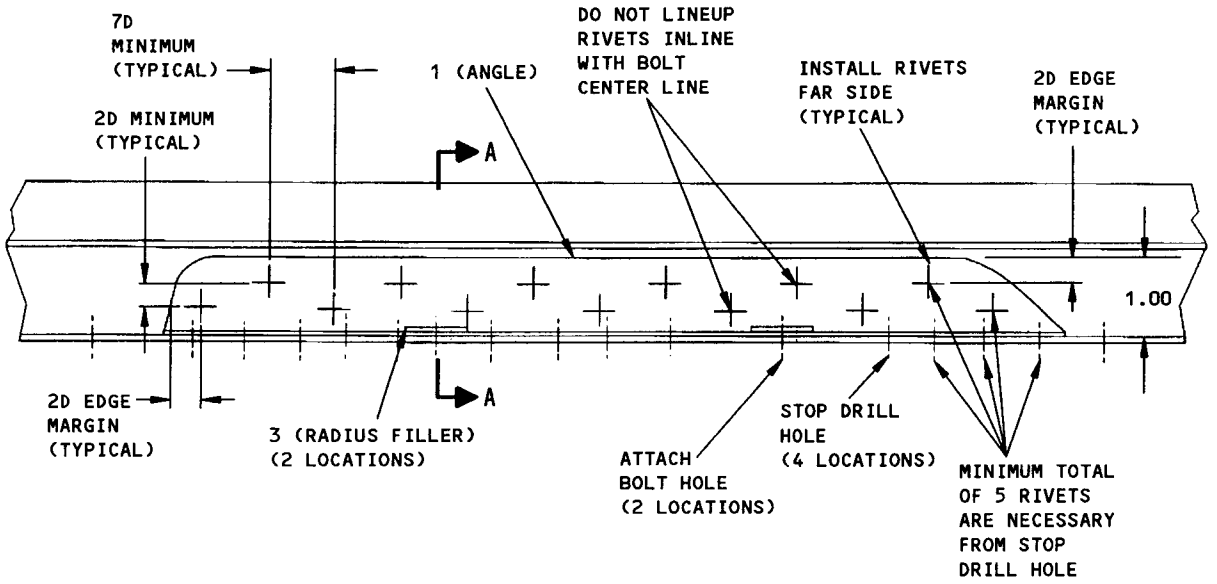

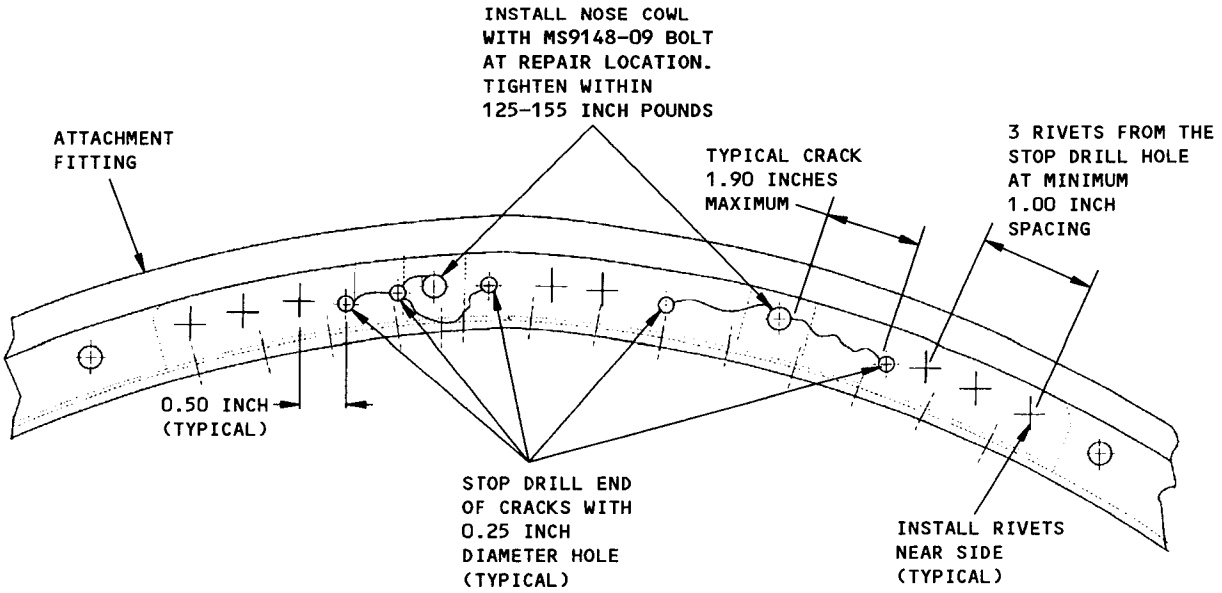

DETAIL I

Fat Lip Nose Cowl - Station 103.82 Engine Attachment Ring Repair
Figure 10 (Sheet 3)

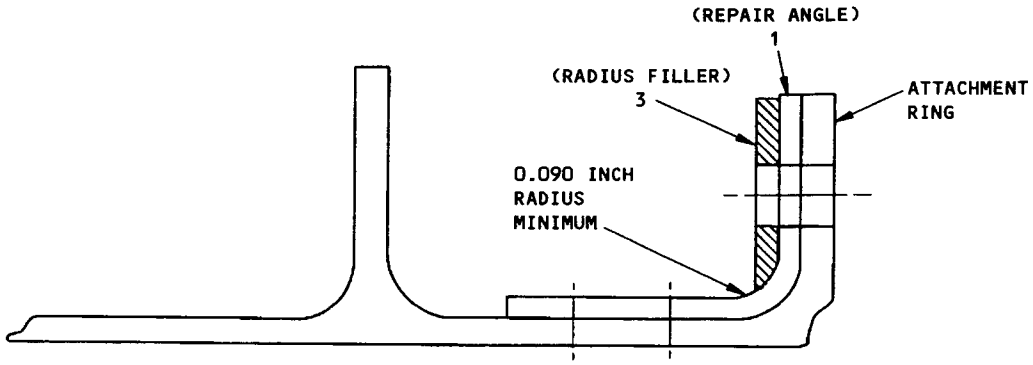

CRACKED HOLE REPAIR
SECTION A-A

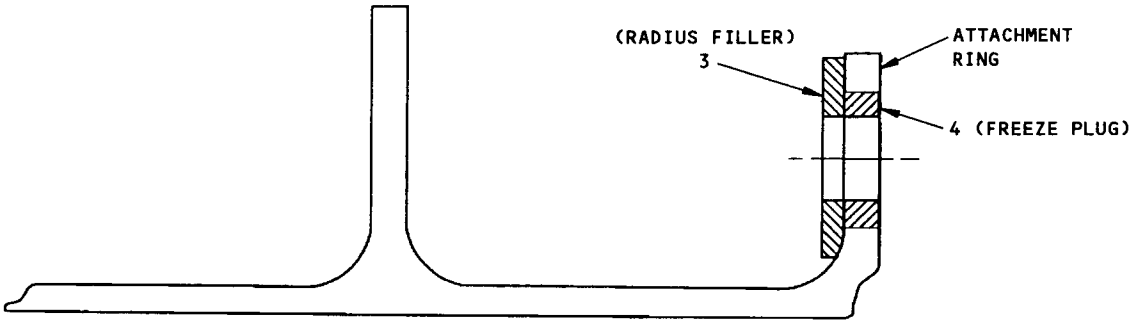

ELONGATED/CORRODED HOLE REPAIR
SECTION A-A

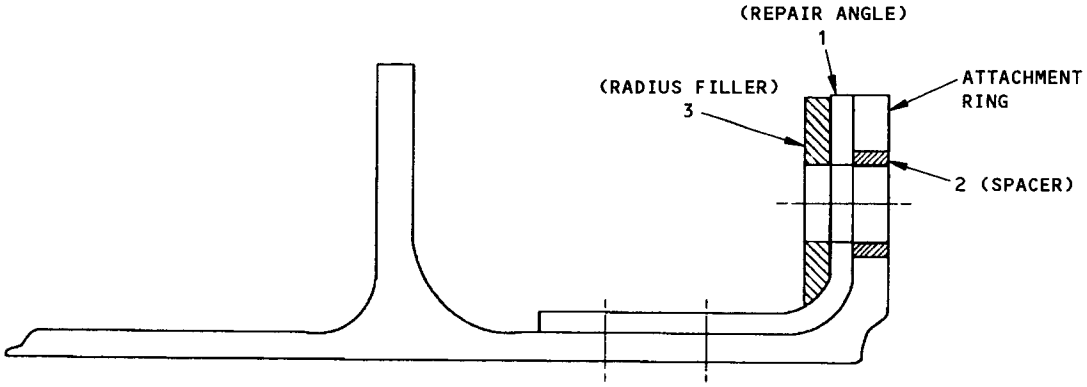

CRACKED AND ELONGATED/CORRODED HOLE REPAIR
SECTION A-A

Fat Lip Nose Cowl - Station 103.82 Engine Attachment Ring Repair
Figure 10 (Sheet 4)

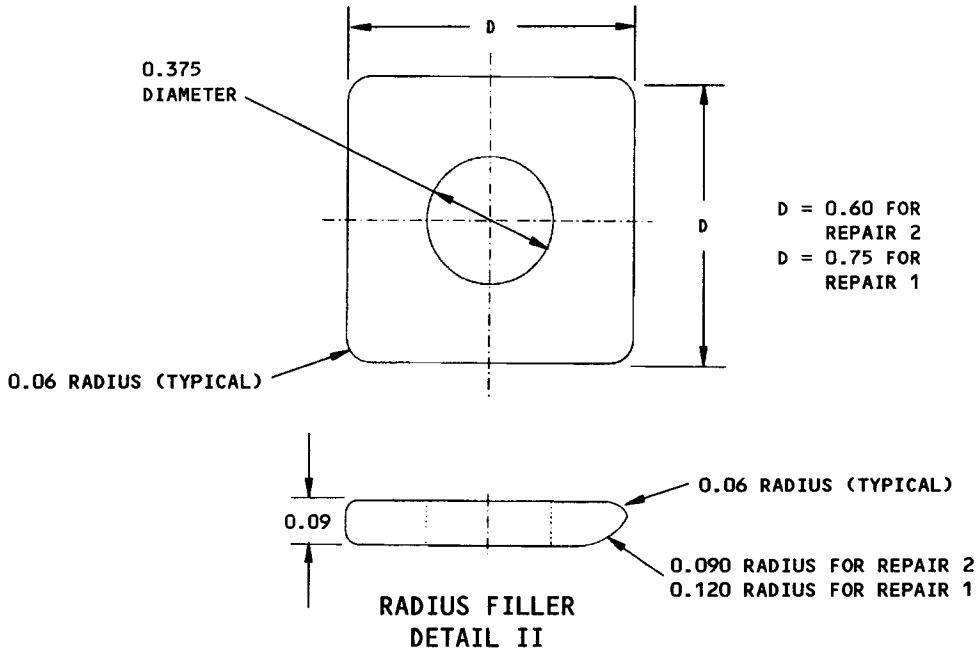

RADIUS FILLER
DETAIL II

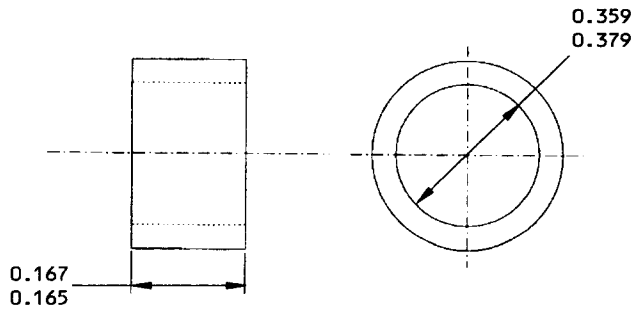

SPACER
DETAIL III

ALL DIMENSIONS ARE IN INCHES

Fat Lip Nose Cowl - Station 103.82 Engine Attachment Ring Repair
Figure 10 (Sheet 5)

AUXILIARY STRUCTURE

1. General

A. Auxiliary structure is defined as those assemblies which are exclusively to contour an area. The sheet metal parts forming such structure may be composed of skins, ribs and bulkheads.

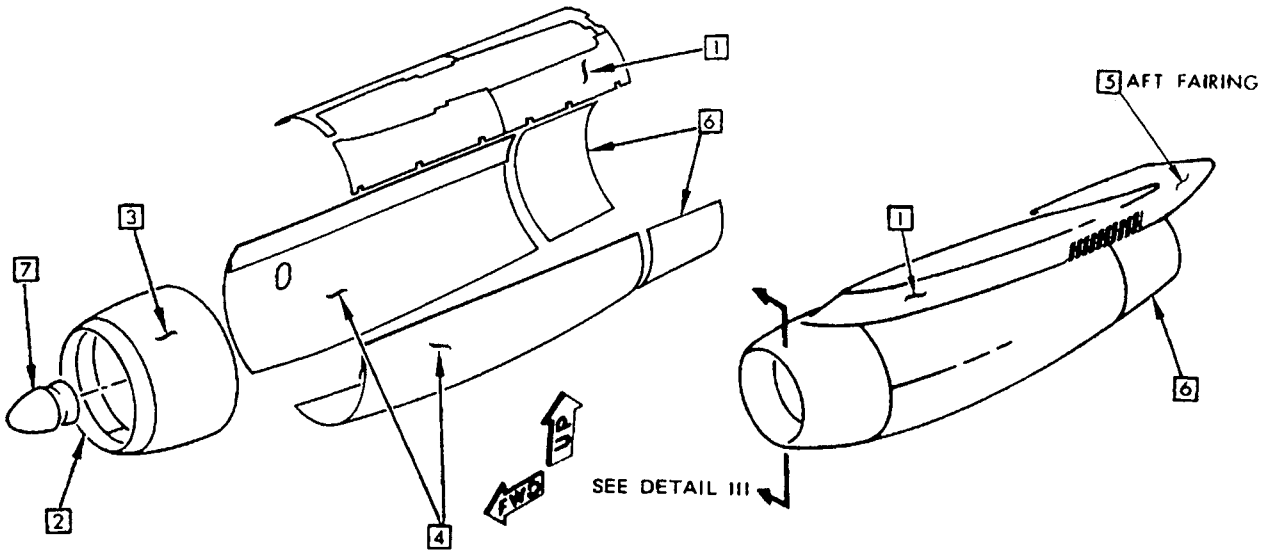

ITEM	LOCATION OF DAMAGE	TYPE OF DAMAGE			
		CRACKS	NICKS AND GOUGES	DENTS	HOLES
1	FORWARD AND MID FAIRING SKINS, FIXED FAIRING	C	SEE DETAILS I, IV AND V A	SEE DETAIL II REFER TO SRM 51-70 B	REFER TO SRM 51-70 NO HOLES PERMITTED
2	NOSE COWL LEADING EDGE	C	SEE DETAILS I, IV AND V REFER TO SRM 51-70 H	SEE DETAIL II AND III REFER TO SRM 51-70 D	REFER TO SRM 51-70 NO HOLES PERMITTED
3	NOSE COWL	J	SEE DETAILS I, IV AND V A	SEE DETAIL II B	REFER TO SRM 51-70 NO HOLES PERMITTED K
4	RH AND LH COWL PANELS				REFER TO SRM 51-70 NO HOLES PERMITTED K
5	AFT FAIRING	C	SEE DETAILS I, IV AND V A	SEE DETAIL II REFER TO SRM 51-70 B	REFER TO SRM 51-70 NO HOLES PERMITTED
6	REMOVABLE TAILPIPE EXTENSION FAIRINGS	J		SEE DETAIL II REFER TO SRM 51-70 B	REFER TO SRM 51-70 NO HOLES PERMITTED K
7	NOSE DOME	SEE FIGURE 3			

ALLOWABLE DAMAGE INDEX

Allowable Damage - Plates and Skins
Figure 1 (Sheet 1)

NOTES

- THE ALLOWABLE DAMAGE LIMITS GIVEN IN THIS FIGURE WILL NOT HAVE AN EFFECT ON A STRUCTURALLY SIGNIFICANT ITEM (SSI) GIVEN IN SRM 51-00-4, FIG. 3. THUS, NO CHANGE TO THE SUPPLEMENTAL STRUCTURAL INSPECTION DOCUMENT (SSID) INSPECTION PROGRAM IS NECESSARY.
- CRACKS AND DENTS THAT HAVE NOT BEEN REPAIRED CAN CHANGE THE AERODYNAMIC PERFORMANCE OF THE AIRPLANE.

[A] THE MAXIMUM DEPTH (X) OF A SCRATCH, GOUGE OR NICK MUST NOT BE MORE THAN 20% OF THE SKIN THICKNESS. SEE DETAIL I.

THE DISTANCE THAT A GOUGE, OR A NICK MUST BE FROM A HOLE, OR AN INITIAL FASTENER IS A MINIMUM OF 20X. REFER TO DETAIL I, DETAIL IV, AND DETAIL V.

[B] REFER TO DETAIL II FOR DAMAGE LIMITS. THE MAXIMUM DEPTH OF THE DENT IN THE SKIN MUST NOT BE MORE THAN Y = 0.25 INCH.

- DO AN INSPECTION OF SKIN DENTS FOR FATIGUE CRACKS. DO A CHECK OF THE DENT AT REGULAR INTERVALS IF THE DIMENSIONS ARE MORE THAN THE LIMITS GIVEN IN DETAIL II.
- CONTINUE INSPECTIONS IN THE AREA UNTIL YOU MAKE A PERMANENT REPAIR OF THE DENT.
- THE SKIN MUST BE REPAIRED IF FATIGUE CRACKS START IN THE AREA OF THE DENT.

[C] ALL CRACKS IN THE SKIN MUST BE REPAIRED. REFER TO SRM 51-10.

[D] REFER TO DETAILS II AND III FOR DAMAGE LIMITS. THE MAXIMUM DEPTH OF THE DENT IN THE SKIN MUST NOT BE MORE THAN Y = 0.125 INCH.

- DENTS OF THIS TYPE WILL NOT HAVE AN EFFECT ON ANTI-ICING OPERATIONS, BUT THEY CAN HAVE AN EFFECT ON ENGINE PERFORMANCE.

[E] DENTS FOUND IN THIS AREA CAN BE FILLED. REFER TO SRM 51-40-1.

[F] YOU MUST NOT FILL DENTS IN THIS AREA.

[G] THIS DIMENSION IS MEASURED ALONG THE SURFACE FROM THE LEADING EDGE.

[H] REFER TO DETAIL I FOR DAMAGE LIMITS. THE MAXIMUM DEPTH OF A SCRATCH OR A NICK MUST NOT BE MORE THAN 25% OF THE SKIN THICKNESS.

[J] CRACKS IN THE SKIN MUST BE REPAIRED. REFER TO SRM 51-10.

AS AN ALTERNATIVE, AND BEFORE YOU MAKE A PERMANENT REPAIR TO THE AREA. YOU CAN DO INSPECTIONS IN THE AREA AT REGULAR INTERVALS FOR CRACK GROWTH, IF YOU HAVE THE CONDITIONS THAT FOLLOW:

(1) THE CRACK IS NOT LONGER THAN FOUR INCHES, AND YOU CAN STOP-DRILL THE CRACK.

(2) THE CRACK IS NOT NEARER THAN TEN INCHES TO THE COWL, THE EDGE OF THE FAIRING, A HARDPOINT (LIKE A LATCH HINGE), DOOR OR OTHER OPENING.

(3) THE CRACK IS NOT NEARER THAN FIFTEEN INCHES TO ANOTHER CRACK.

(4) THERE IS NO OTHER DAMAGE TO THE SUBSTRUCTURE IN THE AREA OF THE CRACK.

(5) THE MISMATCH IN THE SKIN IS NOT MORE THAN 0.050 INCH.

NOTE: IF YOU DO FIND INDICATIONS OF CRACK GROWTH, YOU MUST MAKE A PERMANENT REPAIR TO THE CRACK AREA. REFER TO SRM 51-70.

[K] THIS DOES NOT INCLUDE HOLES THAT YOU STOP DRILL.

Allowable Damage - Plates and Skins
Figure 1 (Sheet 2)

BOEING PROPRIETARY - Copyright © - Unpublished Work - See title page for details.

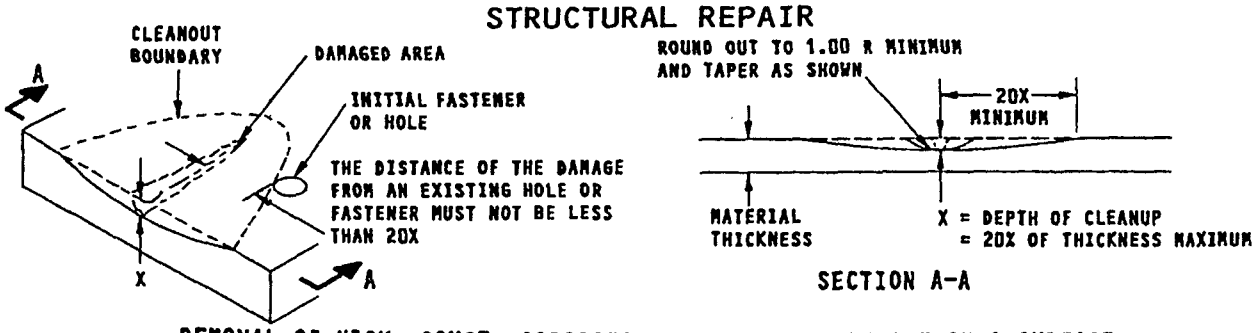

REMOVAL OF NICK, GOUGE, CORROSION, AND SCRATCH DAMAGE ON A SURFACE
DETAIL I

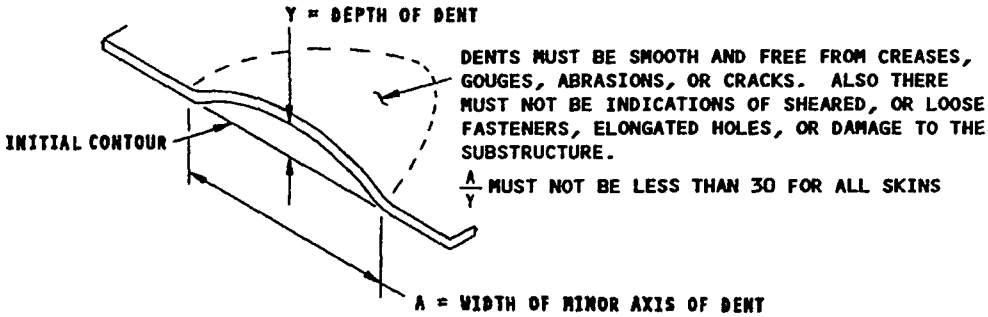

ALLOWABLE DAMAGE FOR DENTS
DETAIL II

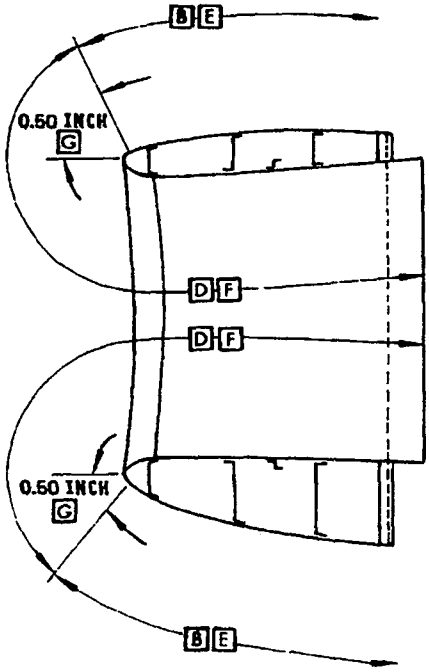

DETAIL III

Allowable Damage - Plates and Skins
Figure 1 (Sheet 2A)

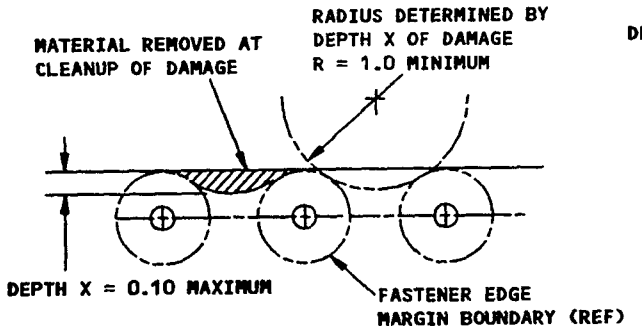

DAMAGE CLEANUP OF EDGES WHERE FASTENER EDGE MARGINS DO NOT OVERLAP

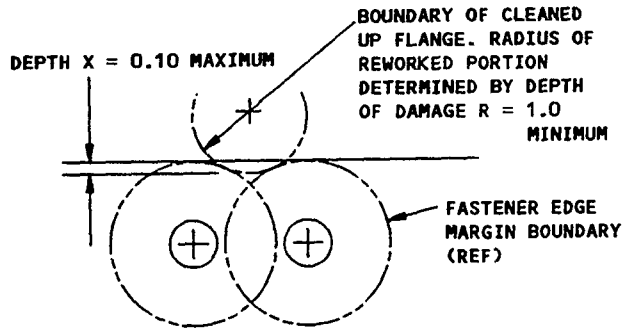

DAMAGE CLEANUP OF EDGES WHERE FASTENER EDGE MARGINS OVERLAP

DETAIL IV

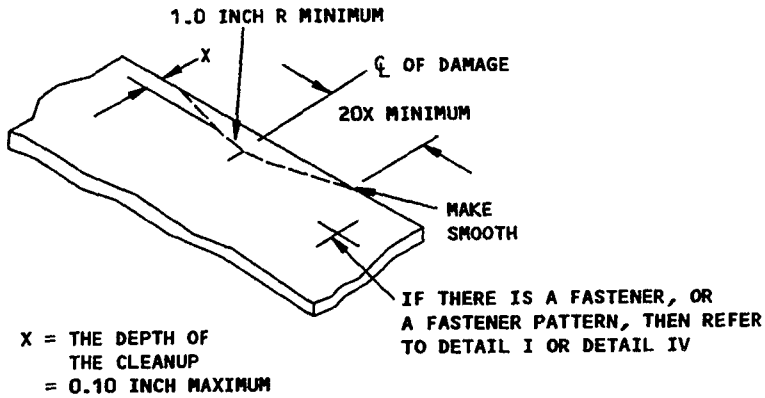

REMOVAL OF DAMAGE ON AN EDGE

DETAIL V

Allowable Damage - Plates and Skins
Figure 1 (Sheet 3)

DAMAGE CLEANUP

A. For slight erosion of leading edges of air inlet the operator may choose to repair the affected areas as follows:

WARNING: CLEANING AND COATING MATERIALS ARE TOXIC AND FLAMMABLE. USE ADEQUATE VENTILATION AND PROPER FIRE PRECAUTIONS.

(1) Mask the unaffected areas.

(2) Clean the surface with cheesecloth moistened with water.

(3) Polish or sand the affected area to a smooth surface and to a depth not to exceed 25% of the original skin thickness.

NOTE: Use aluminum oxide abrasives or aluminum wool. Do not use silicon carbide abrasives or steel wool.

(4) Blend the depressions into the surrounding area using powdered household cleanser or 400 grit aluminum oxide paper. Refer to section A-A for blending requirements.

(5) Wipe area clean using clean cheesecloth moistened with solvent, Series 80 (Ref AMM/SOPM 20-30-80).

(6) Determine the depth of material removed by the use of a Vidigage, Branson digital caliper, dial gage or straight edge and feeler gages, whichever method is most suitable. If the amount of material removed exceeds 25% of the original skin thickness, contact The Boeing Company for instructions. If the amount of material removed does not exceed 25% of the original skin thickness, apply Alodine 1000 to the repaired surfaces per 51-10-2 and return the airplane to service.

NOTE: See Fig. 1 for allowable damage limits for other types of damage.

B. For additional protection against erosion of leading edges of air inlet, especially where erosion is moderate to severe, the leading edges may be refinished with Astrocoat which can be replaced when it becomes eroded. Cleanup of eroded areas using an abrasive blast, which provides for minimum removal of metal, is recommended.

(1) Mask unaffected areas and close off and seal openings to prevent entry of foreign matter.

(2) Static ground both the airplane and the abrasive blast equipment.

Allowable Erosion Damage to Leading Edge of Air Inlet
Figure 2 (Sheet 1)

(3) Spray clean the eroded area with water. If an eroded protective coating is to be replaced, soak the coating beneath cheesecloth saturated with MEK or MIBK until coating is sufficiently soft to remove with a plastic scraper.

(4) Abrasive blast the eroded area per 51-10-6, ensuring that all of the oxide and/or corrosion have been removed from the eroded area.

CAUTION: DO NOT USE CHEESECLOTH OR ANY OTHER FABRIC TO CLEAN THE BLASTED AREA. LINT DEPOSITED ON BLASTED AREA WHEN COVERED WITH ASTROCOAT SHORTENS THE LIFE OF ASTROCOAT.

(5) Spray clean with water.

NOTE: If the metal had been sanded and it remains smooth, the area may be wiped clean with solvent, Series 84 (Ref AMM/SOPM 20-30-84) and cheesecloth.

(6) Determine the depth of material removed. If the amount of material removed exceeds 25% of the original kin thickness, contact the Boeing Company for instructions. If the amount of material removed does not exceed 25% of the original skin thickness, apply Alodine 1200 with nylon brush. Do not use cheesecloth or any other fabric.

(7) Apply Astrocoat per 51-20-5, ensuring that the full thickness of Astrocoat completely covers the area subjected to erosion.

(8) Restore original finish after the Astrocoat has dried 1 hour at 70-75°F and a relative humidity of 40-50%.

(9) After the final application, cure for at least 8 hours at 70-75°F and a relative humidity of 40-50% before returning airplane to service.

Allowable Erosion Damage to Leading Edge of Air Inlet
Figure 2 (Sheet 2)

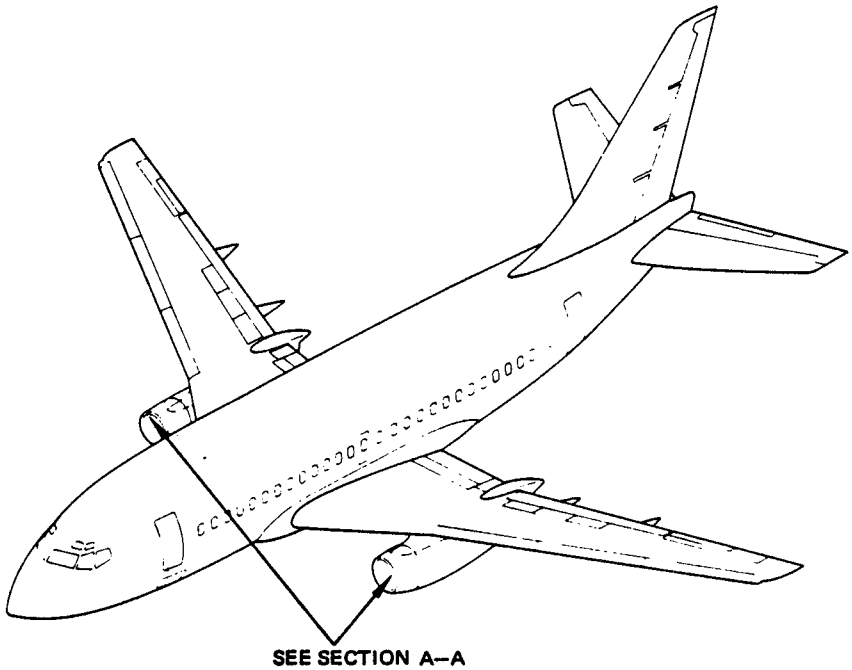

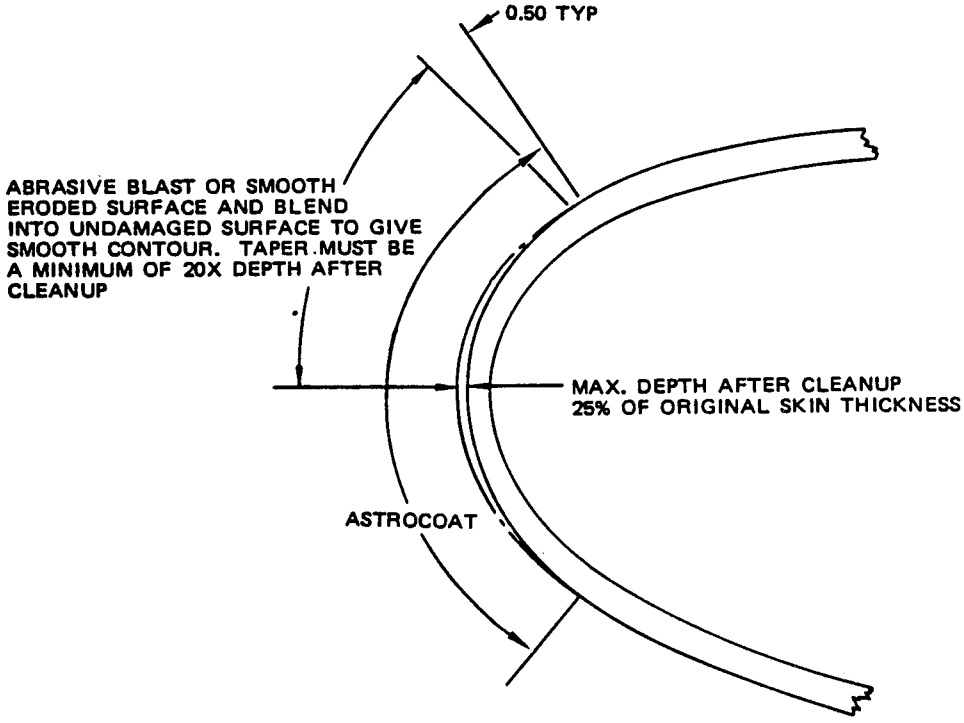

SECTION A–A

Allowable Erosion Damage to Leading Edge of Air Inlet
Figure 2 (Sheet 3)

REF DWGS.
65-85369
10-61900
65-85679
65-85382
65-19684

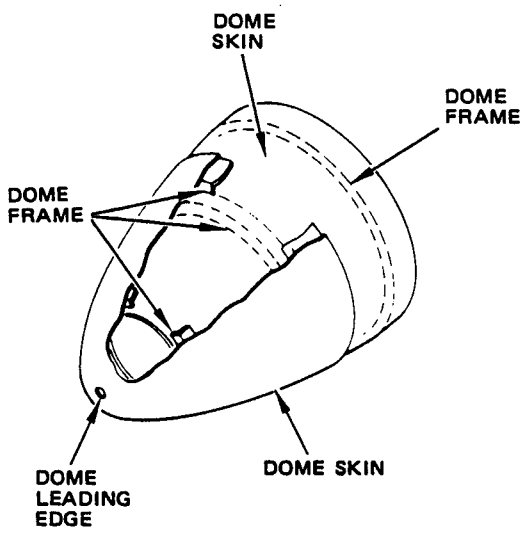

NOSE DOME

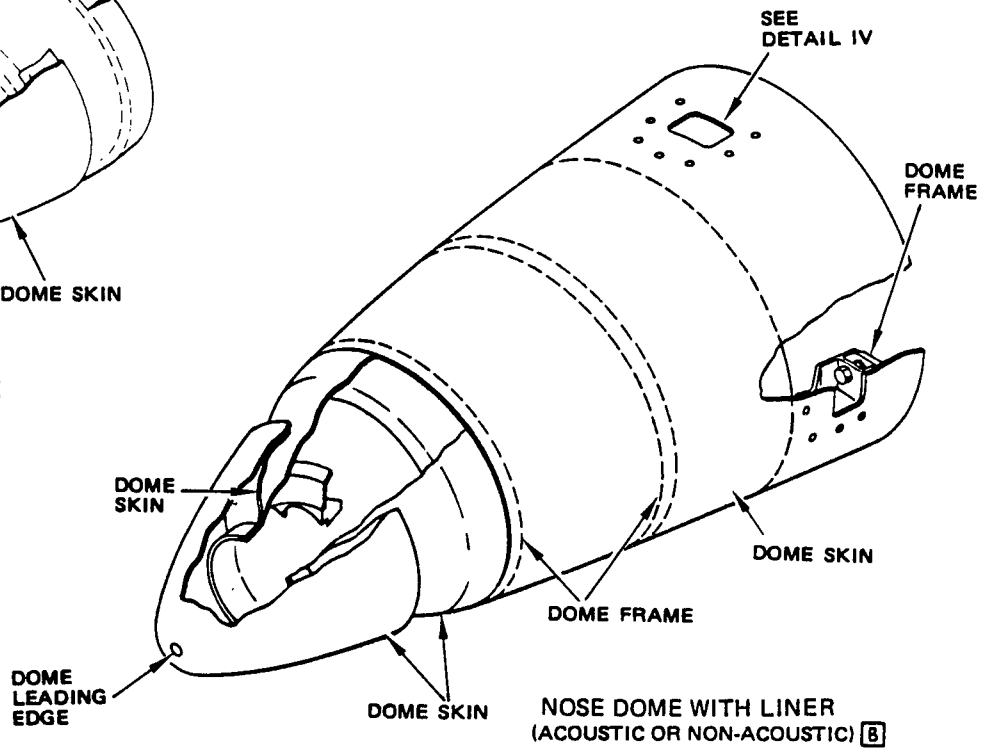

NOSE DOME WITH LINER
(ACOUSTIC OR NON-ACOUSTIC) [B]

	CRACKS	DENTS, NICKS AND GOUGES	HOLES
DOME SKIN	NOT ALLOWED	REMOVE EDGE DAMAGE PER DETAIL II AND III MAX DIA OF DENTS NOT TO EXCEED 2.00 INCHES DENTS SHALL BE NO CLOSER TOGETHER THAN 4.00 INCHES EDGE OF DENT SHALL NOT BE LESS 1.00 INCH TO ANY HOLE EDGE FASTENER, ADJACENT SKIN SPLICE OR FRAME SEE DETAIL I [A]	NOT ALLOWED
DOME FRAMES	NOT ALLOWED	SEE DETAIL II & III [A]	NOT ALLOWED
DOME LEADING EDGE	EROSION—MAX 20 PERCENT OF SKIN THICKNESS SEE FIGURE 2 FOR REPAIR		

NOTES

[A] SCRATCHES THAT DO NOT PENETRATE CLADDED SURFACE MAY BE IGNORED.

[B] SEE 54-30-01 OF THE ROHR REPAIR MANUAL FOR ACOUSTIC NOSE DOMES MADE BY ROHR INDUSTRIES, INC.

Allowable Damage - Nose Dome
Figure 3 (Sheet 1)

$\frac{A}{Y}$ MUST NOT BE LESS THAN 30

FOR DOME SKIN – Y = 0.05 MAX

FOR FLANGES OF STIFFENERS FRAMES, AND CHORDS Y = 0.05 MAX

FOR WEBS Y = 0.125 MAX

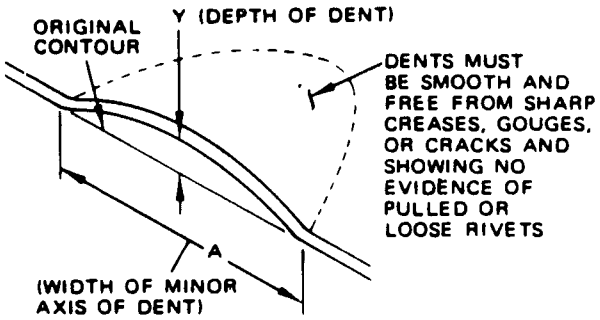

DETAIL I

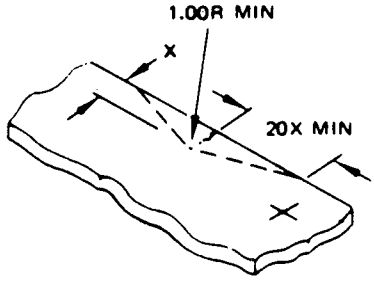

X = DEPTH OF CLEANUP AREA REMOVED MUST NOT EXCEED 10% OF THE WEB CROSS-SECTION AREA

DETAIL II

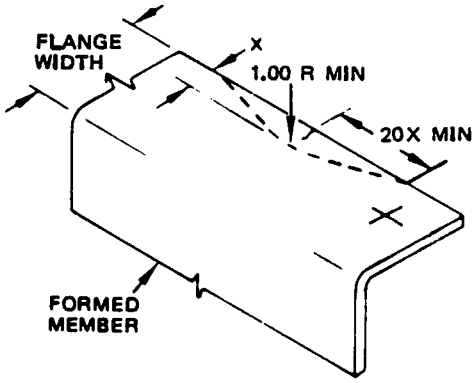

X = DEPTH OF CLEAN UP NOT TO EXCEED 10% OF FLANGE WIDTH

DETAIL III

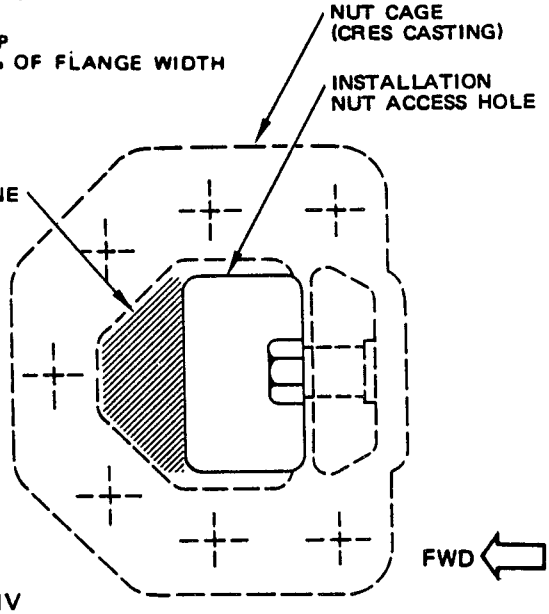

<u>CLEANUP TO ACCESS HOLE FOR INSTALLATION NUT.</u>

DURING REMOVAL OR INSTALLATION OF NOSE DOME DAMAGE CAN OCCUR TO THE FORWARD AREA OF ACCESS HOLE. REPAIR AS FOLLOWS:
DAMAGE MAY BE TRIMMED AWAY TO EDGE OF NUT CAGE – DO NOT CUT INTO NUT CAGE. AFTER TRIMMING ALL RAW EDGES MUST BE TREATED WITH ALODINE SOLUTION AS DESCRIBED IN 51-10-2

DETAIL IV
(FOR NON ACOUSTIC NOSE DOME)

Allowable Damage - Nose Dome
Figure 3 (Sheet 2)

ITEM	MATERIAL	REPAIR FIG. NO.
1	FIXED FAIRING SKIN 0.025 TI-6AL-4V TITANIUM SHEET PER MIL-T-9046, TYPE III, COMP. C ANNEALED	
2	COWL SKIN 0.028 2024-T3 CLAD ALUMINUM SHEET PER QQ-A-250/5	54-10-3 FIG. 1,2
3	AFT COWL SKIN PANEL 0.028 2024-T3 CLAD ALUMINUM SHEET PER QQ-A-362	54-10-3 FIG. 1,2
4	FIRESHIELD 0.005 AISI 302 CRES, ANNEALED	54-10-3 FIG. 2
5	INNER SKIN 0.056 2024-0 BARE PERFORATED ALUMINUM SHEET	
6	STANDARD NOSE COWL INNER SKIN 0.056 2024-T3 CLAD ALUMINUM SHEET	
7	INNER SKIN 0.050 2024-T3 CLAD ALUMINUM SHEET	
8	STANDARD NOSE COWL LIP SKIN 0.063 2024-T42 CLAD ALUMINUM	54-30-3 FIG. 4
9	STANDARD NOSE COWL OUTER SKIN 0.071 2024-T42 ALUMINUM CHEM-MILLED TO 0.040	54-30-3 FIG. 1,2,3
10	DYNAROHR ACOUSTIC PANEL. CONTACT ROHR, INC. FOR REPAIRS	
11	NOSE COWL LIP SKIN 0.063 6061-T3	54-30-3 FIG. 4
12	OUTER SKIN 0.040 2024-0 CLAD ALUMINUM SHEET PER QQ-A-250/5 HT TR T42	
13	NOSE COWL LIP SKIN 0.050-0.075 BARE 2219-0 ALUMINUM PER MIL-A-8920, HT TR T62	54-30-3 FIG. 4
14	ACOUSTIC PANEL 5 PLIES OF PERVIOUS POLYIMIDE GLASS FABRIC ON AIR-WETTED SIDE. 0.300 HEXAGONAL GLASS REINFORCED CORE PER BMS 8-125, CLASS 1, GRADE 4, TYPE 6. 3 PLIES OF IMPERVIOUS POLYIMIDE GLASS FABRIC BACKSHEET SKIN	51-40-11 FIG. 1,2, 3,4
15	DYNAROHR ACOUSTIC PANEL CONTACT ROHR, INC. FOR REPAIRS	I
16	INNER BARREL SKIN NON-ACOUSTIC LINER 0.040 CLAD 2024-T42	
17	STRESSKIN ACOUSTIC HONEYCOMB SANDWICH PANEL	
18	NOSE DOME 0.050 6061-0 BARE ALUMINUM PER QQ-A-327. HT TR T6	
19	REAR FRAME 0.040 2024-0 BARE ALUMINUM PER QQ-A-355, HT TR TO T4	
20	REAR RING 0.050 2024-0 BARE ALUMINUM PER QQ-A-355 HT TR T4	
21	MOUNTING RING 0.040 2024-0 BARE ALUMINUM PER QQ-A-355 HT TR T4	
22	CONE 0.040 6061-0 BARE ALUMINUM PER QQ-A-327 HT TR T6	
23	FORWARD RING 0.050 2024-0 BARE ALUMINUM PER QQ-A-355 HT TR T4	
24	LINER-NON ACOUSTIC 0.040 6061-0 BARE ALUMINUM PER QQ-A-250/11, HT TR T6	

Nacelle Skin Identification
Figure 1 (Sheet 1)

BOEING PROPRIETARY - Copyright © - Unpublished Work - See title page for details.

ITEM	MATERIAL	REPAIR FIG. NO.
25	NOSE DOME EXTENSION - ACOUSTIC LINER 8 OR 9 PLIES OF PERVIOUS POLYIMIDE GLASS FABRIC ON THE AIRWETTED SIDE. 0.200 HEXAGONAL GLASS REINFORCED CORE PER BMS 8-125, CLASS 1, GRADE 4, TYPE 6. 3 PLIES OF IMPERVIOUS POLYIMIDE GLASS FABRIC BACKSHEET SKIN	
26	DOUBLER 0.063 2024-T3 CLAD ALUMINUM PER QQ-A-250/5	
27	INTERMEDIATE RING 0.050 2024-0 CLAD ALUMINUM PER QQ-A-250/5 HT TR T42	
28	FORWARD RING 0.050 2024-0 CLAD ALUMINUM PER QQ-A-250/5 HT TR T42	
29	OUTER CONE 0.063 6061-0 BARE ALUMINUM PER QQ-A-250/11 HT TR T6	
30	INNER CONE 0.056 6061-0 BARE ALUMINUM PER QQ-A-250/11 HT TR T6	
31	NOSE COWL LIP SKIN 0.100 2219-0 BARE ALUMINUM AS GIVEN IN MIL-A-8920 HT TR T62	54-30-3 FIG. 4

Nacelle Skin Identification
Figure 1 (Sheet 2)

BOEING PROPRIETARY - Copyright © - Unpublished Work - See title page for details.

NOTES

[A] FOR CUM LINE NUMBERS:
2 THRU 5, 7 THRU 44, 46 THRU 134
WITH SB 78-1005 INCORPORATED.

[B] FOR CUM LINE NUMBERS:
1 THRU 301, 304, 309, 311 THRU
322 (DELIVERED WITH "STANDARD"
COWLS)

[C] FOR CUM LINE NUMBERS:
302, 303, 305 THRU 308, 310, 323
AND ON (DELIVERED WITH FAT LIP
COWLS)

[D] FOR AIRPLANES WITH STANDARD NOSE
COWL

[E] FAT LIP NOSE COWLS AND EXTENDED
NOSE DOMES ARE OPTIONAL
VARIATIONS AND MAY BE INSTALLED
IN PRODUCTION OR RETROACTIVELY
IN KITS

[F] ALL AIRPLANES WITH SOUND
ATTENUATION TREATMENT

[G] PANEL VARIATIONS ARE OPTIONAL
KITS

[H] FOR AIRPLANES WITH FAT LIP NOSE
COWL

[I] REFER TO ROHR, INC.
REPAIR MANUAL FOR THE
ACOUSTICALLY TREATED INLET COWL
AND NOSE DOME PANELS, 54-30-01

[J] FOR AIRPLANES WITH ACOUSTIC TAIL
PIPE ASSEMBLY

[K] NON-ACOUSTIC LINER

[L] ACOUSTIC LINER

[M] ACOUSTICALLY TREATED NOSE COWL
ASSEMBLY FOR AIRPLANES WITH THE
BASIC NUMBERS THAT FOLLOW:
P2814-P2830, P2368-P4399,
P4402-P5499, P8910-P9995

Nacelle Skin Identification
Figure 1 (Sheet 3)

BOEING PROPRIETARY - Copyright © - Unpublished Work - See title page for details.

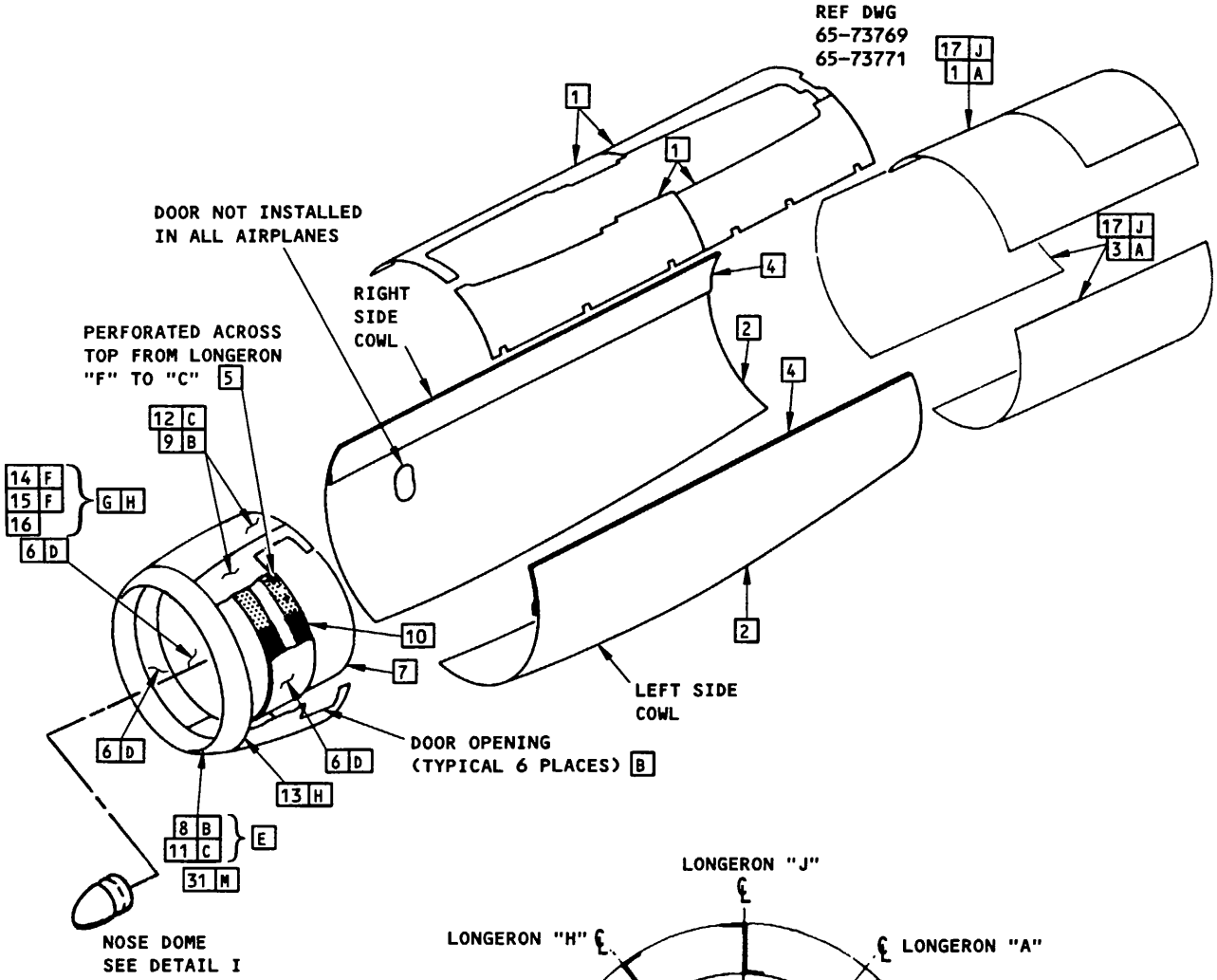

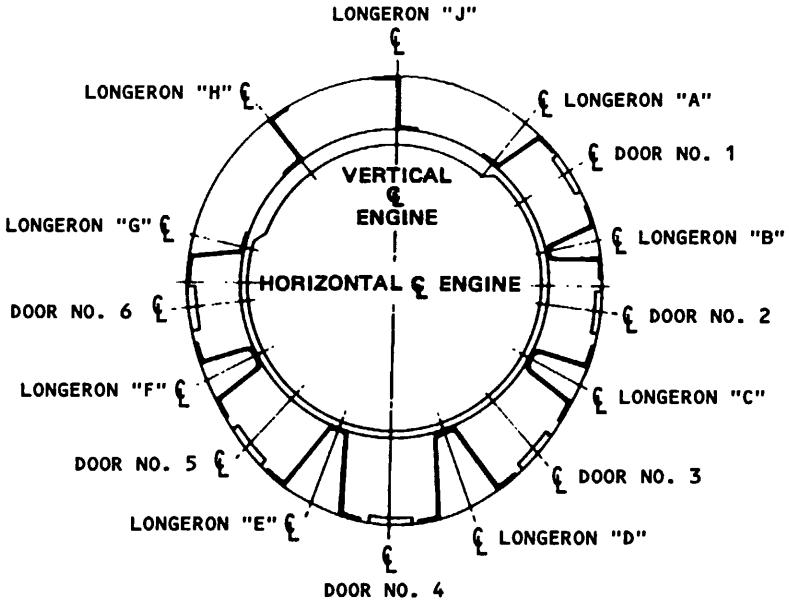

FRONT VIEW
(LEFT SIDE ENGINE)

Nacelle Skin Identification
Figure 1 (Sheet 4)

BOEING PROPRIETARY - Copyright © - Unpublished Work - See title page for details.

REF DWG
65-19684

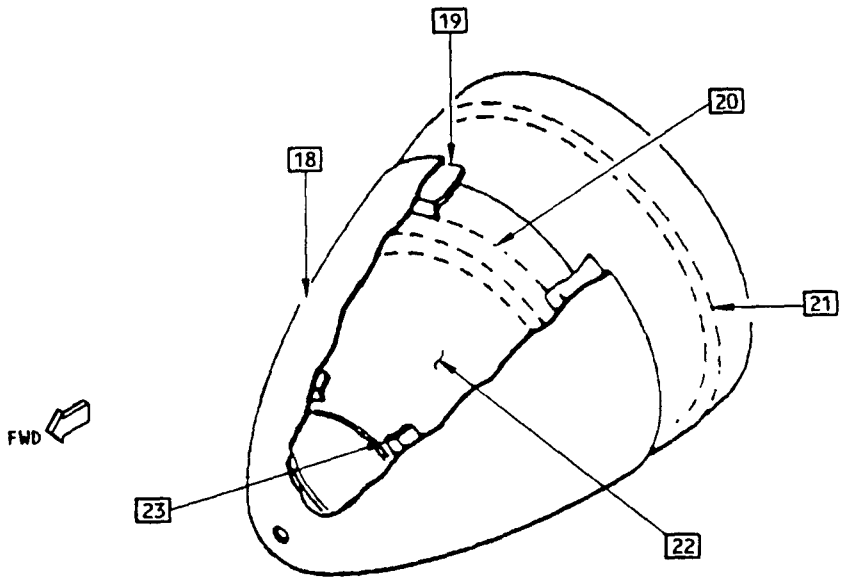

STANDARD NOSE DOME - NON ACOUSTIC D

REF DWG
65-85389
65-85679
65-85382
10-61900

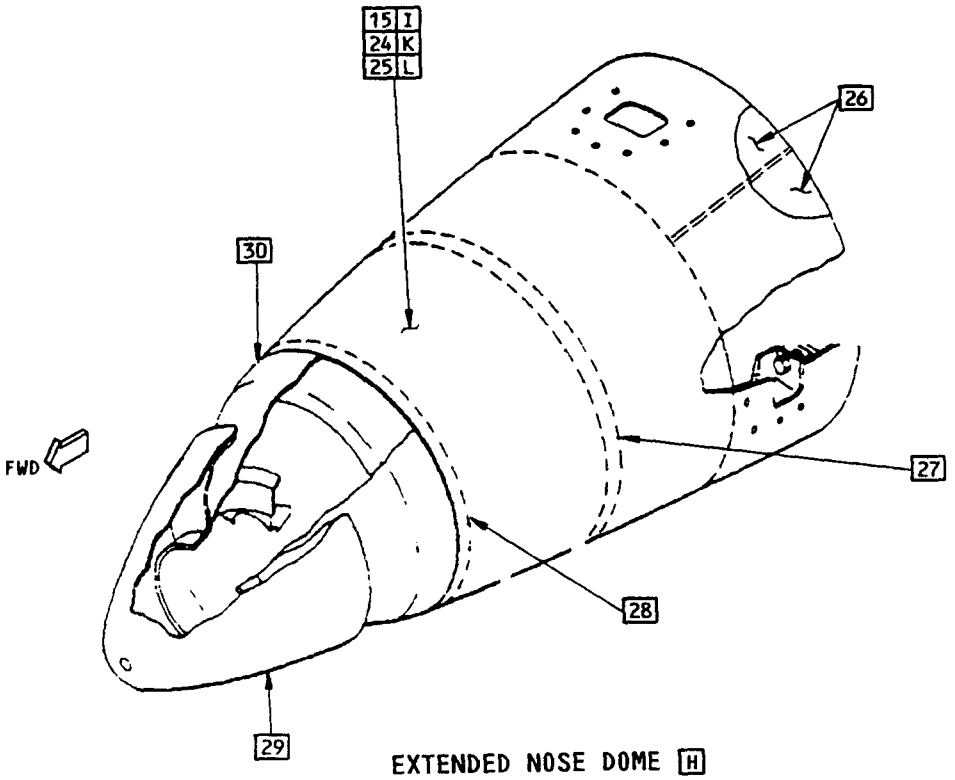

EXTENDED NOSE DOME H
DETAIL I

Nacelle Skin Identification
Figure 1 (Sheet 5)

NOTES

- ALL SKIN IS TITANIUM 6AL-4V TYPE III UNLESS OTHERWISE NOTED

[A] BONDED ASSEMBLY (ACCESS PANEL)

[B] FOR PASSENGER AIRPLANES UP TO CUM LINE NUMBER 471 AND 737–200C AIRPLANES UP TO CUM LINE NUMBER 571

[C] FOR PASSENGER AIRPLANES FROM CUM LINE NUMBER 472 AND 737–200C AIRPLANES FROM CUM LINE NUMBER 573

REF DWG
65-73769
65C14094

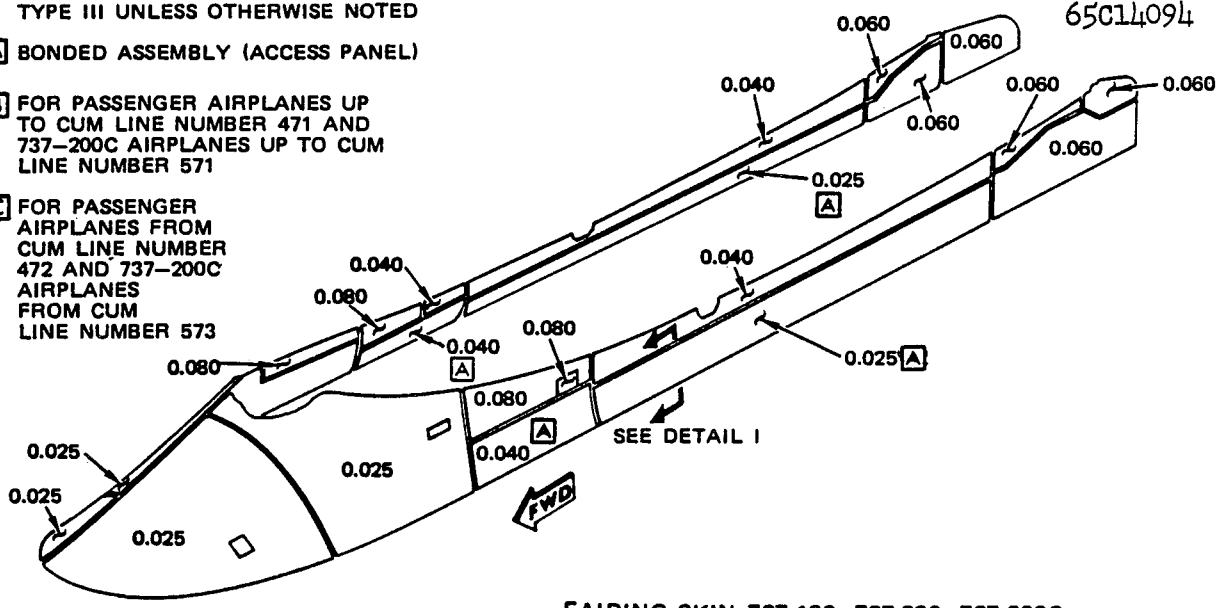

FAIRING SKIN 737-100, 737-200, 737-200C
(EXCEPT ADVANCED AIRPLANES)

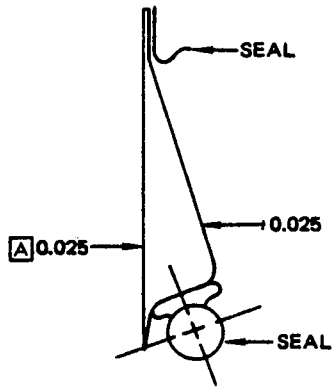

DETAIL I

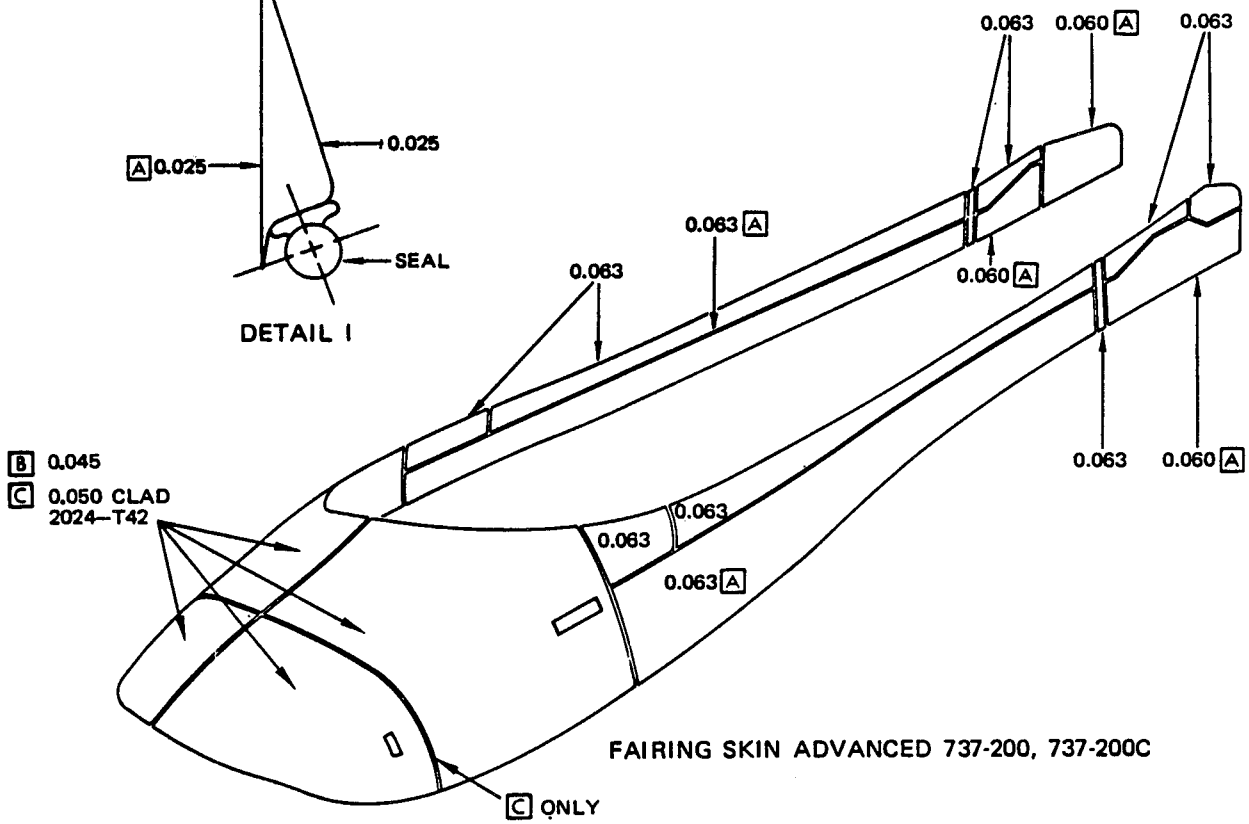

FAIRING SKIN ADVANCED 737-200, 737-200C

Nacelle to Wing Fairing Skin Identification
Figure 2

REF DWG
65-55460

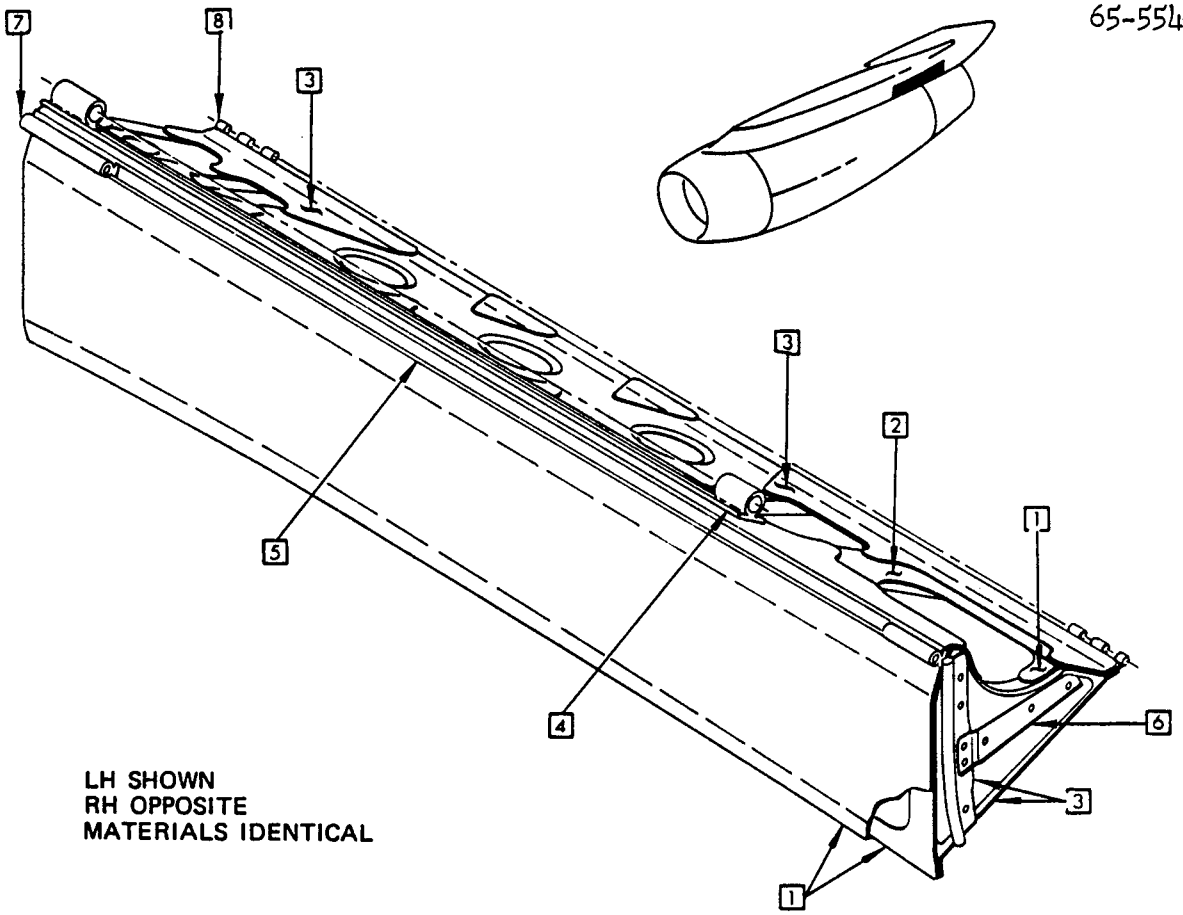

LH SHOWN
RH OPPOSITE
MATERIALS IDENTICAL

ITEM	MATERIAL	REPAIR FIG. NO.
1	0.020 6AL-4V TITANIUM	
2	0.025 6AL-4V TITANIUM	
3	0.032 6AL-4V TITANIUM	
4	BAC1494-178 CRS 302 COND 2D	
5	BAC1494-180 CRS 302 COND 2D	

ITEM	MATERIAL	REPAIR FIG. NO.
6	0.050 CRES 302	
7	RUBBER - BMS 1-36 NOMEX CORE	
8	MS20527HC3-3800 CRES MIL-S-6721	

Aft Fairing Skin Identification
Figure 3

REPAIR INSTRUCTIONS

1. Access doors are necessary when the inner or outer skin is damaged or rivets come loose.
2. Make the repair parts.
3. Apply a chemical conversion coating to the bare surfaces of the repair parts, intial parts and fastener holes.
4. Bond parts [2] and [3] together to form the ring assembly.
5. Locate and install NAS686A3 nutplates on the inner surface of part [3] at 12 places designated thus ✦, leaving space for the installation of part [4] over the saw cut.
6. Locate and install the ring assembly. Bond the assembly to the cowl inner skin.
7. Install the NAS686A3 nutplates to part [4] in four places.
8. Locate and install part [4] at the ring assembly gap. Bond part [4] to the ring assembly.
9. Remove the loose particles and debris.
10. Install the access door part [1].
11. Apply the initial finish.

NOTES

- THIS REPAIR WILL NOT HAVE AN EFFECT ON A STRUCTURALLY SIGNIFICANT ITEM (SSI) GIVEN IN SRM 51-00-4, FIG. 3. THUS, NO CHANGE TO THE SUPPLEMENTAL STRUCTURAL INSPECTION DOCUMENT (SSID) INSPECTION PROGRAM IS NECESSARY.
- WHEN THE NOSE COWL INNER OR OUTER SKIN IS DAMAGED OR RIVETS BECOME LOOSE, INSTALL AN ACCESS DOOR IN THE OUTER SKIN TO PROVIDE ACCESS FOR REPAIR.
- WHEN YOU DO THIS REPAIR, REFER TO:
  - AMM 51-21-0 FOR INTERIOR AND EXTERIOR FINISHES
  - SRM 51-10-2 FOR PROTECTIVE TREATMENT OF METAL
  - SRM 51-30 FOR FASTENER CODE, REMOVAL AND INSTALLATION, HOLE SIZES AND EDGE MARGINS
  - SRM 51-40-5 STRUCTURAL BONDING.
- BREAK THE SHARP EDGES OF THE INITIAL AND REPAIR PARTS 0.015 TO 0.030 INCH.

[A] THE AVAILABLE AREAS FOR THE ACCESS DOORS SHOULD BE CHECKED TO ENSURE ADEQUATE CLEARANCE FOR THE DOOR SUPPORTING STRUCTURE AND THE INITIAL SKIN SPLICES, DOUBLERS, FRAMES OR STIFFENERS.

FASTENER SYMBOLS

✦ REPAIR FASTENER LOCATION

REPAIR MATERIAL			
PART		QTY	MATERIAL
[1]	DOOR	1	0.063 INCH THICK CLAD 2024-0 HT-T42
[2]	RING	1	0.020 INCH THICK CLAD 2024-T3
[3]	DOUBLER	1	0.063 INCH THICK CLAD 2024-0 HT-T42
[4]	PLATE	1	0.063 INCH THICK CLAD 2024-T3

Installation of Nose Cowl Doors for Access to Repairs
Figure 1 (Sheet 1)

BOEING PROPRIETARY - Copyright © - Unpublished Work - See title page for details.

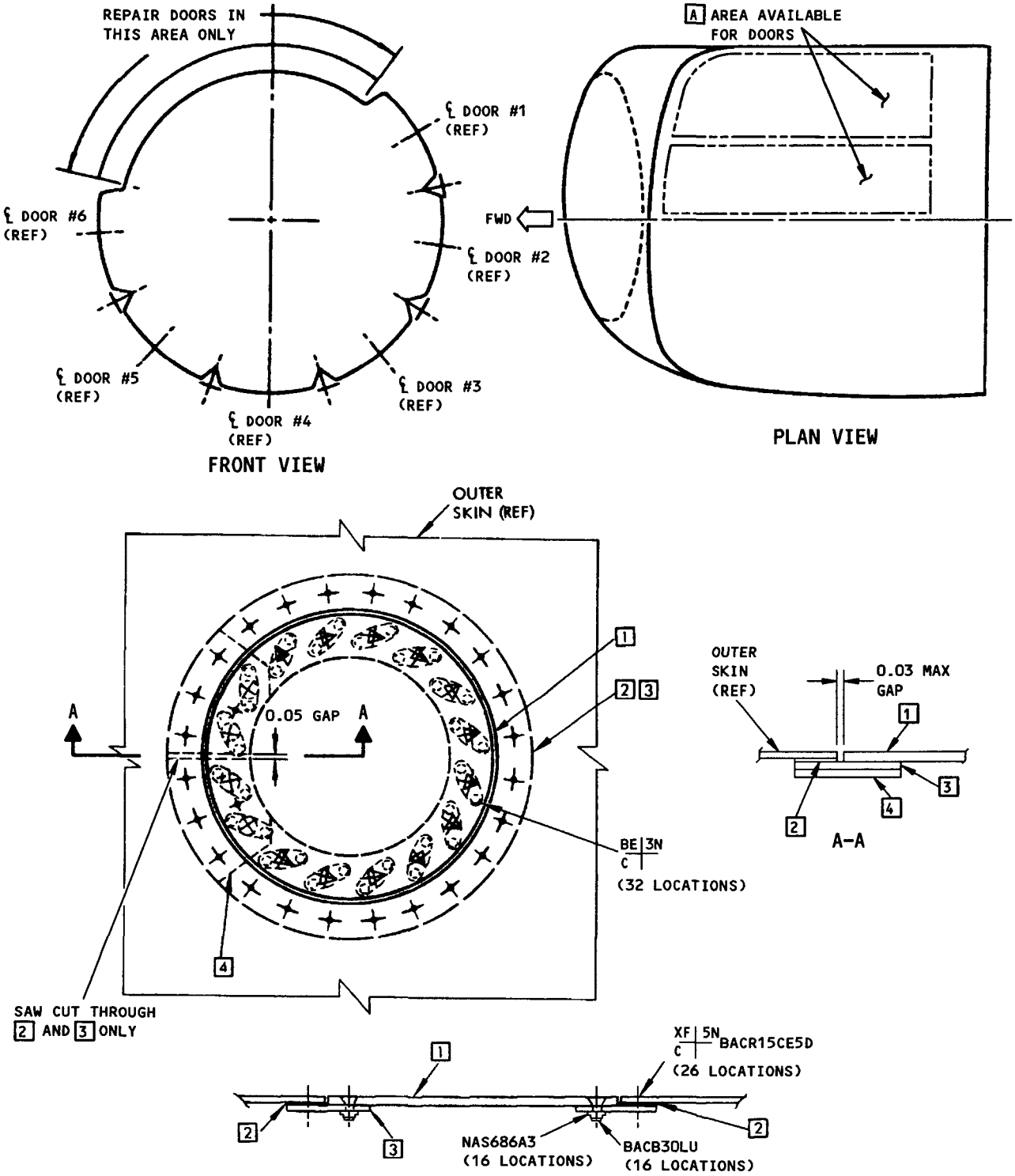

Installation of Nose Cowl Doors for Access to Repairs
Figure 1 (Sheet 2)

BOEING PROPRIETARY - Copyright © - Unpublished Work - See title page for details.

REPAIR INSTRUCTIONS

1. Remove front portion of the nacelle to wing fairing.
2. Cut and remove the damaged portion of skin, making the aperture large enough to allow the repair plate to be passed through it.
3. Make the repair parts.
4. Assemble the repair parts and drill the fastener holes.
5. Remove the repair parts and apply a chemical conversion coating to the bare surfaces of the initial skin and repair part [2].
6. Rivet repair part [1] to repair part [2], as given in SRM 51-40-5. Leave two holes empty to enable a length of wire to be threaded through for handling purposes.
7. Install the repair parts, bonding as given in SRM 51-40-5.
8. Remove the wire and fill the empty holes with fasteners.
9. Apply a layer of teflon that is 0.010 inch thick to the skin in the area making contact with the nacelle to wing fairing.

NOTES

- THIS REPAIR WILL NOT HAVE AN EFFECT ON A STRUCTURALLY SIGNIFICANT ITEM (SSI) GIVEN IN SRM 51-00-4, FIG. 3. THUS, NO CHANGE TO THE SUPPLEMENTAL STRUCTURAL INSPECTION DOCUMENT (SSID) INSPECTION PROGRAM IS NECESSARY.
- DAMAGE NOT DEEPER THAN 0.008 INCH IS PERMITTED IF IT IS REWORKED AS SHOWN IN SRM 54-30-1. THIS REPAIR IS FOR DAMAGE THAT IS DEEPER THAN 0.008 INCH.
- WHEN YOU USE THIS REPAIR, REFER TO:
  - SRM 51-10-2 FOR PROTECTIVE TREATMENT OF METALS
  - SRM 51-30 FOR HOLE SIZES, EDGE MARGINS AND FASTENER INSTALLATION
  - SRM 51-70 FOR AERODYNAMIC SMOOTHNESS REQUIREMENTS.
- BREAK THE SHARP EDGES OF THE INITIAL AND REPAIR PARTS 0.015 TO 0.03 INCH.

[A] FASTENER FLUSHNESS TOLERANCE ±0.002 INCH IN AREA OF CONTACT WITH FAIRING. ELSEWHERE IN AIRSTREAM +0.004/-0.000 INCH.

FASTENER SYMBOLS

REPAIR FASTENER LOCATIONS

Nose Cowl Skin Repair in the Vicinity of the Nacelle to Wing Fairing
Figure 2 (Sheet 1)

BOEING PROPRIETARY - Copyright © - Unpublished Work - See title page for details.

REPAIR MATERIAL			
PART		QTY	MATERIAL
1	FILLER	1	.040 AISI 302
2	PLATE	1	.050 CLAD 2024-0 HT-T42

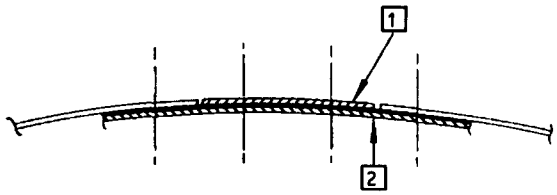

SECTION THROUGH REPAIR

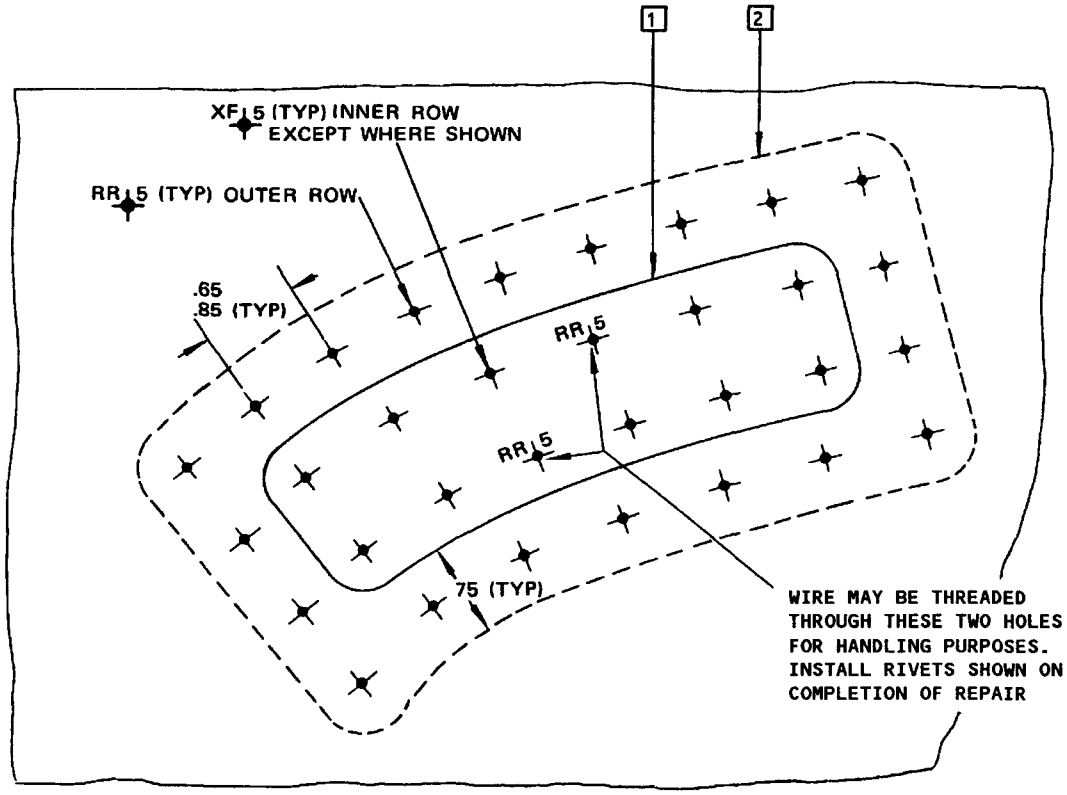

A RR 5 NAS1399M5

A XF 5 BACR15CE5D

Nose Cowl Skin Repair in the Vicinity of the
Nacelle to Wing Fairing
Figure 2 (Sheet 2)

BOEING PROPRIETARY - Copyright © - Unpublished Work - See title page for details.

REPAIR INSTRUCTIONS

1. Remove the front portion of the nacelle to wing fairing.
2. Cut and remove the damaged portion of skin, making the aperture large enough to allow the repair plates to be passed through it. Care must be taken not to damage the longeron which is bonded to the skin.
3. Make the repair parts.
4. Assemble the repair parts and drill the fastener holes.
5. Remove the repair parts and apply a chemical conversion coating to the bare surfaces of the initial and repair parts made from aluminum alloy.
6. Install repair part [2], bonding as given in SRM 51-40-5.
7. Install repair part [3], bonding as given in SRM 51-40-5.
8. Install repair parts [1] and [4] bonding as given in SRM 51-40-5.
9. Apply a layer of teflon that is 0.010 inch thick to the skin in the area making contact with the nacelle to wing fairing.

NOTES

- THIS REPAIR WILL NOT HAVE AN EFFECT ON A STRUCTURALLY SIGNIFICANT ITEM (SSI) GIVEN IN SRM 51-00-4, FIG. 3. THUS, NO CHANGE TO THE SUPPLEMENTAL STRUCTURAL INSPECTION DOCUMENT (SSID) INSPECTION PROGRAM IS NECESSARY.
- DAMAGE NOT DEEPER THAN 0.008 INCH IS PERMITTED IF IT IS REWORKED AS SHOWN IN SRM 54-30-1. THIS REPAIR IS FOR DAMAGE THAT IS DEEPER THAN 0.008 INCH AND NEAR THE LONGERON.
- WHEN YOU USE THIS REPAIR, REFER TO:
  - SRM 51-10-2 FOR PROTECTIVE TREATMENT OF METALS
  - SRM 51-30 FOR HOLE SIZES, EDGE MARGINS AND FASTENER INSTALLATION AND SUBSTITUTION
  - SRM 51-70 FOR AERODYNAMIC SMOOTHNESS REQUIREMENTS.
- BREAK THE SHARP EDGES OF THE INITIAL AND REPAIR PARTS 0.015 TO 0.03 INCH.

[A] FASTENER FLUSHNESS TOLERANCE ± 0.002 INCH IN AREA OF CONTACT WITH FAIRING. ELSEWHERE IN AIRSTREAM +0.004/-0.000 INCH.

FASTENER SYMBOLS

✦ REPAIR FASTENER LOCATIONS

REPAIR MATERIAL			
PART		QTY	MATERIAL
[1]	FILLER	1	0.040 INCH THICK AISI 302
[2]	PLATE	1	0.050 INCH THICK CLAD 2024-T42
[3]	PLATE	1	0.050 INCH THICK CLAD 2024-T42
[4]	FILLER	1	0.028 INCH THICK CLAD 2024-0

Nose Cowl Skin Repair at Longeron in the Vicinity of the Nacelle to Wing Fairing
Figure 3 (Sheet 1)

BOEING PROPRIETARY - Copyright © - Unpublished Work - See title page for details.

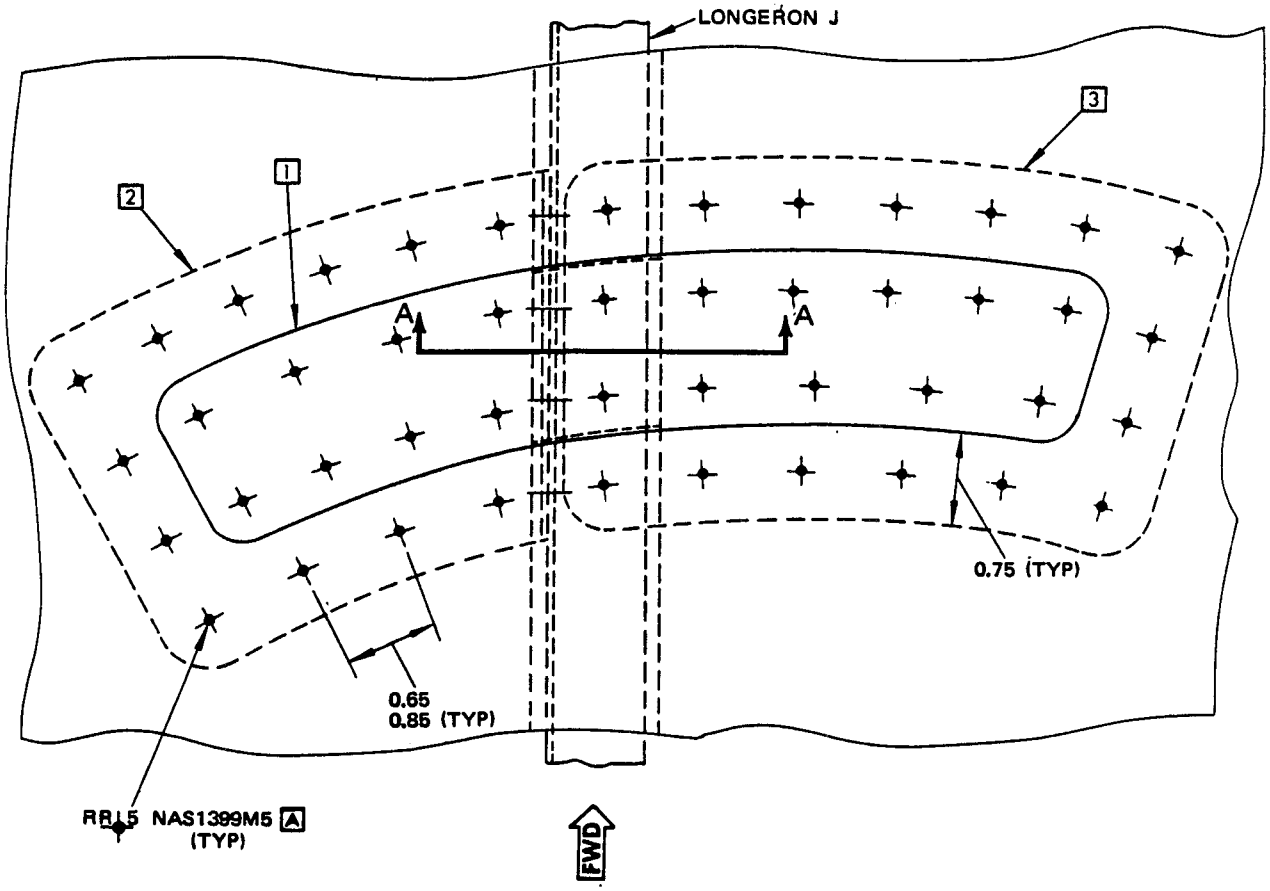

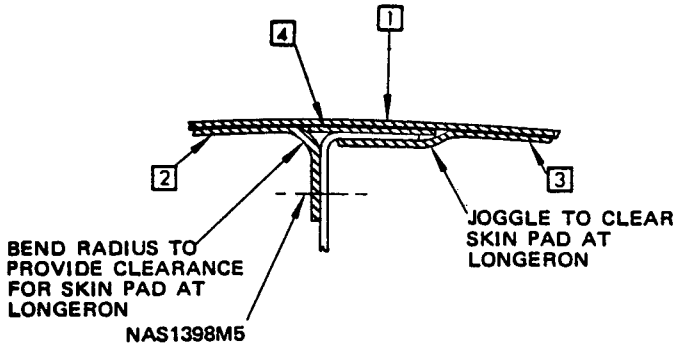

SECTION A - A

Nose Cowl Skin Repair at Longeron in the Vicinity of the Nacelle to Wing Fairing
Figure 3 (Sheet 2)

REPAIR INSTRUCTIONS

1. Cut and remove the damaged portion of skin in the shape of a rectangle.
2. Make the repair parts.
3. Assemble the repair parts and drill the fastener holes.
4. Remove the repair parts.
5. Apply a chemical conversion coating to the repair parts and the cut edges of the initial parts.
6. Install parts [2], [3] and [4], bonding as given in SRM 51-40-5.
7. Install part [1], bonding as given in SRM 51-40-5.

NOTES

- THIS REPAIR WILL NOT HAVE AN EFFECT ON A STRUCTURALLY SIGNIFICANT ITEM (SSI) GIVEN IN SRM 51-00-4, FIG. 3. THUS, NO CHANGE TO THE SUPPLEMENTAL STRUCTURAL INSPECTION DOCUMENT (SSID) INSPECTION PROGRAM IS NECESSARY.

  CAUTION: MAKE SURE THAT THERE ARE NO LOOSE FASTENERS IN THE LIP SKIN. FASTENER INGESTION CAN CAUSE ENGINE DAMAGE.
- DO AN INSPECTION OF THE LIP SKIN. LOOK FOR LOOSE RIVETS.
- WHEN YOU DO THIS REPAIR, REFER TO:
  - AMM 51-21-0 FOR INTERIOR AND EXTERIOR FINISHES
  - SRM 51-10-2 FOR PROTECTIVE TREATMENT OF METAL
  - SRM 51-30 FOR FASTENER CODE, REMOVAL, INSTALLATION, HOLE SIZES AND EDGE MARGINS
  - SRM 51-40-5 FOR STRUCTURAL BONDING
  - SRM 51-70 FOR AERODYNAMIC SMOOTHNESS REQUIREMENTS.
- BREAK THE SHARP EDGES OF THE INITIAL AND REPAIR PARTS 0.015 TO 0.030 INCH.
- REMOVE ALL NICKS, SCRATCHES, BURRS, SHARP EDGES AND CORNERS FROM THE INITIAL AND REPAIR PARTS.

FASTENER SYMBOLS

REPAIR FASTENER LOCATION. INSTALL A NASM90353-U05D BLIND FASTENER.

REPAIR FASTENER LOCATION. INSTALL A BACR15CE5D RIVET.

REPAIR MATERIAL			
	PART	QTY	MATERIAL
[1]	LIP SKIN	1	SAME MATERIAL AND THICKNESS AS INITIAL SKIN 2024-0 HT-T42
[2]	PLATE	2	SAME MATERIAL AND THICKNESS AS INITIAL SKIN
[3]	PLATE	1	SAME MATERIAL AND THICKNESS AS INITIAL SKIN
[4]	PLATE	1	SAME MATERIAL AND THICKNESS AS INITIAL SKIN

Nacelle Nose Skin Repair
Figure 4 (Sheet 1)

BOEING PROPRIETARY - Copyright © - Unpublished Work - See title page for details.

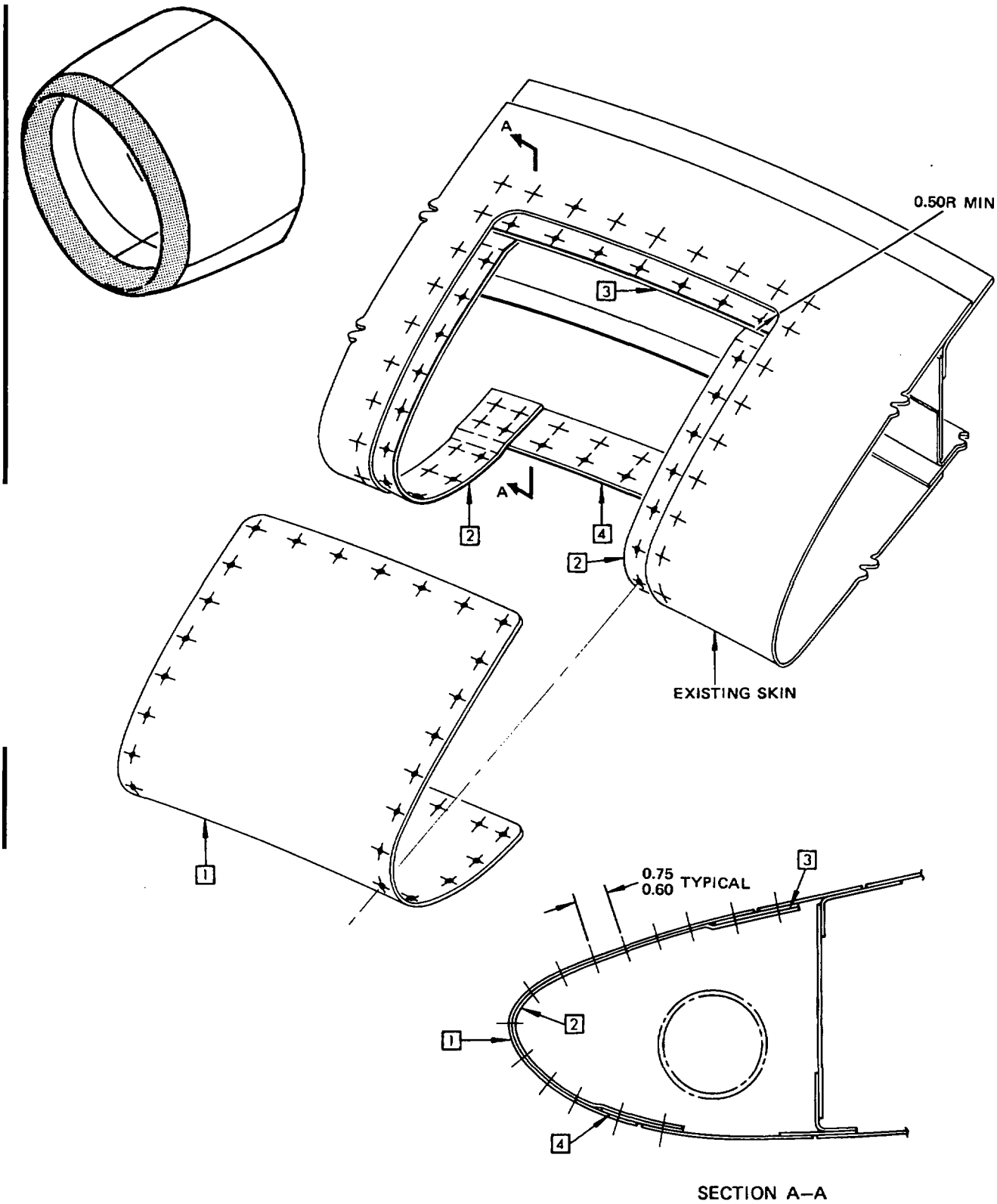

Nacelle Nose Skin Repair
Figure 4 (Sheet 2)

BOEING PROPRIETARY - Copyright © - Unpublished Work - See title page for details.

ATTACH FITTINGS

1. General

   A. Attach fittings are normally replacement items.